HailSens Edge | Quick installation guide

KISTERS

Package contents

Hail Sensor Edge (pre-mounted unit)

Pole mounting bracket (pre-mounted)

Power & Modbus RTU connection cable M12 8-pin (10 m)

Feedthrough for Ethernet cable

Tools: open-ended wrench, Allen key, RJ45 protection cap, SMA antenna cap

FAT document

Quick Installation Guide

Specifications summary

Measured Parameters:

Kinetic energy [J], derived equivalent diameter [mm]

Range: 0.005 J ... 28 J

Accuracy: ±10 %

Dimensions:

- Ø 500 mm (19.685“), height: 300 mm
- weight: 6 kg net

Operating voltage:

10 ... 30 V DC

Power consumption @ 12V:

Idle2 0.25 W max. / Peak (LTE-M) 1.7 W max.

Peak (2G fallback) 5 W max.

Physical Outputs:

- wireless IP data modem, SMA connector, antenna
- wired: Ethernet RJ45 connector
- wired: Modbus over RS-485

Miscellaneous

Operating temperature range: -40 °C ... +70 °C (-40 °F ... 158 °F)

Medium temperature: 0 °C ... +70 °C (32 °F ... 158 °F) for best performance

Deployment & storage: -25 °C ... +70 °C (-13 °F ... 158 °F)

Calibrated measurement range: 0 °C ... +70 °C (32 °F ... 158 °F)

Local Communication: Wi-Fi

Ingres Protection: IP66

Main Parts – Overall

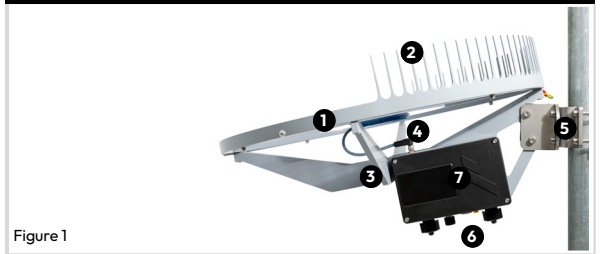

Figure 1

1 Transducer Unit
2 Bird guard
3 Support
4 Signal cable between transducer and electronics
5 Pole mount bracket
6 Various connectors (for details refer to Figure 2)
7 Electronics box

Main Parts – Connectors

1 Ethernet RJ45 plug
2 M12 8-pin signal and power connector
3 Pressure compensation gland
4 SMA antenna connector
5 SIM card holder

Figure 2

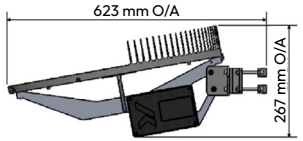

Side view

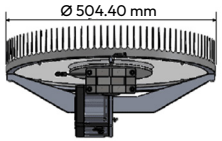

Front view

Do not connect or disconnect the transducer while the HailSens Edge unit is powered on. Always connect the transducer before switching on the unit.

Mounting instructions

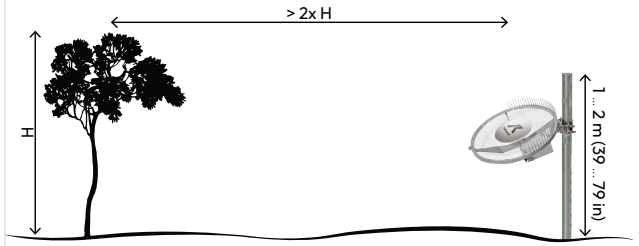

When the Hail Sensor is installed, the following should be considered:

- Avoid obstruction to sensor plate (i.e. clear areas are required no trees, close high-rise, etc.)
- Avoid nearby power line & communication towers (i.e. anything that could attract lighting & surges)
- Avoid high wind areas

Equipotential bonding (precabled)

Pole mount bracket for poles with Ø 1.5“ ... 4“

M6 Earth Stud

Consider the following when installing Hail Sens:

- Ensure that there are no obstacles to the sensor plate. Select open areas without nearby trees, tall buildings, or other potential obstructions.
- Avoid power line and communication towers that could attract lightning and surges.
- Avoid areas with high wind.

HailSens Edge | Quick installation guide

KISTERS

Configuration

The unique Wi-Fi password is provided on the FAT certificate delivered with the HailSens Edge.

Configuration Software

HyComm is **KISTERS** software utilized for local communication between a computer or portable device and the **HailSens radar sensor.**

To connect:

1. Switch on the mobile hotspot in the HailSens sensor by swiping a magnet across the lower bottom of the KISTERS "K" on the cover.
2. Click on the Wi-Fi icon in in your computer's taskbar.
3. Select the Wi-Fi access point named **HSEYYNNN** from the provided list, where **HSEYYNNN** is the **serial number of the HailSens** device.
4. Once the Wi-Fi connection is established, start HyComm to communicate with the device. HyComm will prompt you to enter a password. Use the initial password printed on the FAT document supplied with the device. This password is unique to each device. For security reasons, we recommend changing it to a secure password of your choice.
5. The computer connects to the Wi-Fi hotspot.

Download HyComm Installer

M12 8-Pin Connector pinout

1	2	3	4	5	6	7	8
Power VCC +	Power GND -	NC	NC	RS485A	RS485B	NC	NC

Pin assignment (female view)

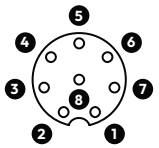

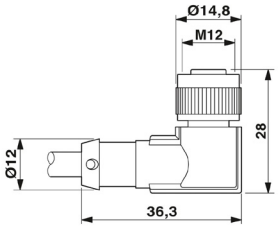

Connection diagram

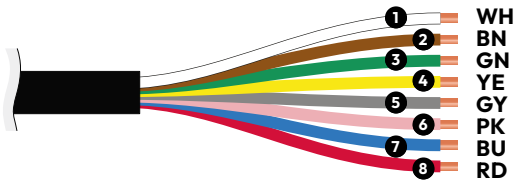

⚠ **Caution:** Incorrect or faulty connection can damage the device. All interface and power cables are protected against reverse polarity, but incorrect connection of power cables to interface cables can damage the device.

Ethernet Connection

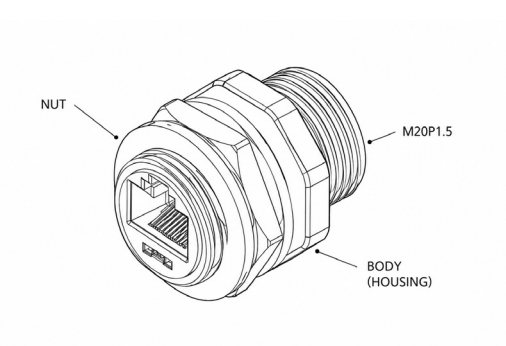

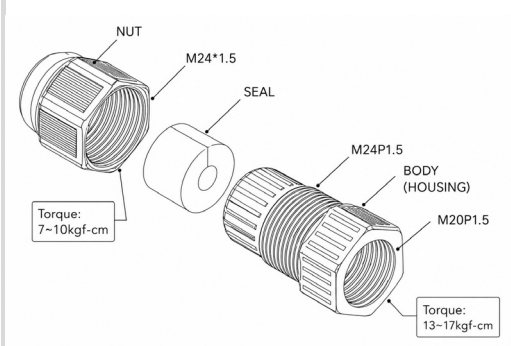

The Ethernet cable is needed for wired Ethernet communication only!

HailSens Edge is equipped with a special RJ45 female connector.

Water-/weatherproof Cat 6 RJ45 pass-through.

For waterproof operation in the field:

- No cable connected: fit the (pre-installed) weatherproof round cap.
- RJ45 connected: Use feedtrough (provided) for Cat 6 cables with an OD of 5.5 ... 7 mm.
  Slide the protective cap onto the open end(s) of the Cat 6 cable.
  Use the tool-free RJ45 connector provided with the HailSens to the open cable end.

⚠ Safety instructions

1. Read this Installation Guide (IG) including all operating instructions prior to installing, connecting and powering up the HailSens Edge. For use by qualified personnel only! Keep the IG on hand for later reference!
2. If you encounter problems understanding the information in the IG (or part thereof), please consult the manufacturer or its appointed reseller for further support.
3. HailSens Edge is a hydrometeorological sensor designed to measure hail impacts. Do not use the sensor for other applications.
4. Do not install and deploy the sensor in hazardous areas, especially not in areas with a danger of explosion!
5. Electrical, technical and climatic specifications must be respected at all times.
6. Changes or retrofits to the HailSens Edge will void the warranty.
7. Comply with electrical safety standards.
8. Comply with Health, Safety & Environment regulations and directives.
9. Inputs and outputs of the device are protected against electric discharges and surges (so-called ESD). Do not touch any part of the electronic components! If you need to touch any part, please discharge yourself, i.e. by touching grounded metal parts.
10. As an electrically powered system, HailSens Edge requires to be grounded.
11. HailSens Edge is equipped with a bird-guard exposing metal spikes. Wear gloves while installing the sensor.

Classification: Public © KISTERS AG 06/2026