HydroMet

User Manual

OSS-B1

KISTERS
Empowering decisions of tomorrow

06-2026 – 01-10-004

Table of Contents

I	Disclaimer	3
II	Scope of Delivery	4
III	Safety Instructions	5
Part I	Introduction	6
Part II	Operation	7
Part III	Maintenance	9
3.1	Service and Recalibration	10
Part IV	Troubleshooting	11
Part V	Repair	13
5.1	Replacement of Cable Ends	14
5.2	Part List	16
Part VI	Technical Data	23
Part VII	Obligations of the Operator and Disposal	24
7.1	Obligations of the Operator	24
7.2	Dismantling / Disposal	24

© 2026 | KISTERS

I Disclaimer

The information provided in this manual was deemed accurate as of the publication date. However, updates to this information may have occurred.

This manual does not include all of the details of design, production, or variation of the equipment nor does it cover every possible situation which may arise during installation, operation or maintenance. KISTERS shall not be liable for any incidental, indirect, special or consequential damages whatsoever arising out of or related to this documentation and the information contained in it, even if KISTERS has been advised of the possibility of such damages.

Any errors found in any KISTERS product should be reported to KISTERS where every effort will be made to quickly resolve the problem.

Copyright Notice: No parts of this work may be reproduced in any form or by any means without the written permission of the publisher. KISTERS waives copyright for users to print out parts of the documentation in hard copy for their own use only.

Trademark Notice: KISTERS products and services referred to in this document are trademarks or registered trademarks of KISTERS. Other product names used may or may not be the trademarks of their respective owners.

© 2026 | KISTERS. Any rights not expressly granted herein are reserved.

This document is public.

II Scope of Delivery

Contents of the basic kit

In durable waterproof carrying case:

- OSS-B1 Body Assembly
- OSS-B1 Counter Connecting Lead
- Body Key
- Propeller Type A
- Screwdriver (Short)
- Screwdriver (Small)
- Spare Parts Kit including:
  - 2 × Spare Bearings SC058-12
  - 1 × O-ring SC024-09 for Contact Cover
  - 1 × O-ring SC024-12 for Propeller Carrier
  - 1 × O-ring SC024-11 for Body/Contact Cover
  - 1 × O-ring SC024-14 for Connecting Lead
  - 1 × Reed Switch Assembly
  - 1 × Cleaning Container
- 1 × Ground Post to suit a Propeller
- 1 × 250 ml Bottle of Oil
- Rating Tables
- 1 × Wading Rod Set 1.8 m long in 3 Sections (3 × 0.6 m), 20 mm Diameter in canvas carrying bag

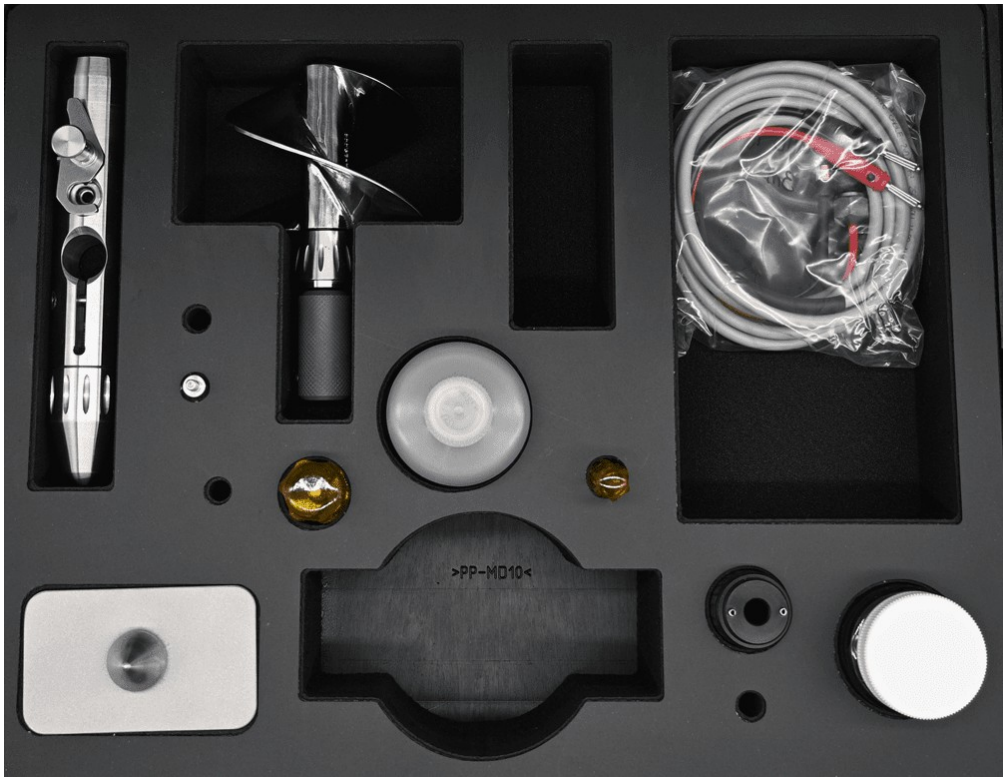

Optional Accessories (ordered separately):

- Current Meter Counter: PVD200
- Propeller: Type 1, 2 and 4 (for details see ch. Technical Data 23)
- Tail Fin Stem Assembly
  - CMB09 1000 mm long
  - CMB09S 650 mm long

III Safety Instructions

- Read the user manual including all operating instructions prior to installing, connecting and powering up the KISTERS OSS-B1. The manual provides information on how to operate the product. The manual is intended to be used by qualified personnel, i.e. personnel that have been adequately trained, are sufficiently familiar with installation, mounting, wiring, powering up and operation of the product.
- Keep the user manual on hand for later reference!
- If you encounter problems understanding the information in the manual (or part thereof), please consult the manufacturer or its appointed reseller for further support.
- KISTERS OSS-B1 is intended to be used in hydrometeorological or environmental monitoring applications.
- Before starting to work, you have to check the functioning and integrity of the system.
  - Check for visible defects on the OSS-B1, this may or may not include any or all of the following: mounting facilities, connectors and connections, mechanical parts, internal or external communication devices, power supplies or power supply lines, etc.
  - If defects are identified that could compromise operational safety, work must be stopped immediately. This applies to defects detected both before work begins and during operation.
- Do not use the KISTERS OSS-B1 in areas where there is a danger of explosion.
- The present user manual specifies environmental/climatic operating conditions as well as mechanical and electrical conditions. Installation, wiring, powering up and operating the KISTERS OSS-B1 must strictly comply with these specifications.
- Perform maintenance only when tools or machinery are not in operation.
- If guards are removed to perform maintenance, replace them immediately after servicing.
- Never make any electrical or mechanical diagnostics, inspections or repairs under any circumstances. Return the product to the manufacturer's named repair centre. You can find information on how to return items for repair in the relevant section of the KISTERS website.

Disposal instructions: After taking the KISTERS OSS-B1 out of service, it must be disposed of in compliance with local waste and environmental regulations. The KISTERS OSS-B1 is never to be disposed of in household waste!

Inputs and outputs of the device are protected against electric discharges and surges (so-called ESD). Do not touch any part of the electronic components! If you need to touch any part, please discharge yourself, i.e. by touching grounded metal parts.

1 Introduction

Thank you for choosing our product. We hope you will enjoy using the device.

KISTERS manufactures, sells, installs and operates quality instrumentation, data loggers and communication technology. Products are designed with passion for environmental monitoring and with a deep understanding of the quality, accuracy and robustness needed to fulfil the requirements of measurement practitioners in the field.

The present User Manual will help you understand, install and deploy the device. If, however, you feel that a particular information is missing, incomplete or confusing, please do not hesitate to contact us for further support!

The OSS-B1 universal current meter is a field-proven instrument for measuring the velocity of water in open and closed channels. It is used for point measurements of flow velocities on the water surface or in vertical profiles down to the riverbed at flow speeds of 0.025 m/s to 10 m/s.

One of the great features of the OSS-B1 is that it can be used with a 20 mm diameter wading rod and relocating device, portable winches and permanent cableway installations, with streamlined Columbus weights or GFN Nose Mounted Ground Feeling weights. Furthermore, an optional tail fin assembly is available in two standard sizes, CMB09S (650 mm long) and CMB09 (1,000 mm long), to control directional stability during suspended measurements.

The OSS-B1 comes with a variety of accessories which enable the user to perform water flow measurement easily and accurately.

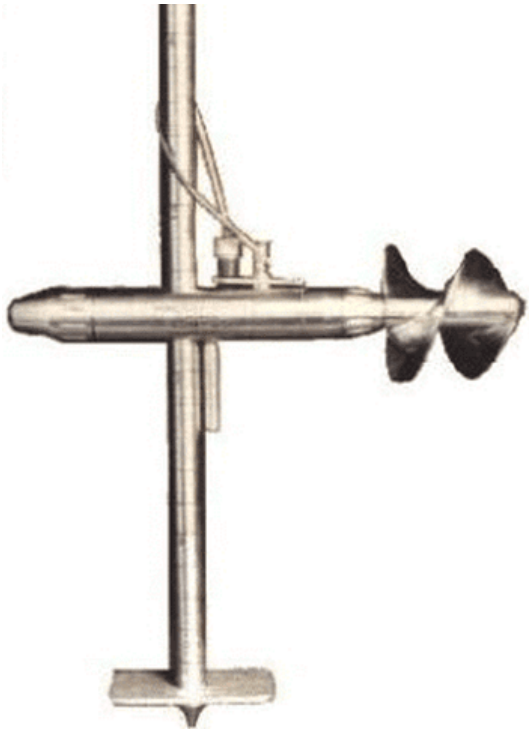

All current meters manufactured by KISTERS are calibrated in our purpose built high velocity rating tank prior to shipment. This rating tank is considered as best in the world since it can run at a velocity of 0.005 m/s minimum and 8 m/s maximum with a velocity resolution of ±0.001 mm

As part of our service we are able to recondition and recalibrate current meters of any make, including electromagnetic and other solid state meters. Calibration is directly traceable to International Standards.

All current meters are calibrated in accordance with **ISO 3455:2021**. The clause below has been printed with permission of Standards Australia from **AS 3778.6.1 - 2022**. This standard is identical with and has been reproduced from ISO 2537:2007. Clause 9.6 Recalibration. The current - meter shall be recalibrated whenever its performance is doubtful. In practice, recalibration for individually rated current - meters shall be carried out at yearly intervals or after 300 hours of use, whichever is shorter. Before undertaking recalibration of any used current - meters, it shall be ensured that the current - meter is properly repaired, its worn out parts replaced and the shape of the rotor is in order.

The purpose of this manual is to make the user familiar with the OSS-B1 current meter. It is a sensitive and reliable precision instrument. It is advisable to read this manual carefully and fully understand its use. After reading this manual if you are not sure about any details, please do not hesitate to contact our office (contact details are on the cover of this manual).

2 Operation

One impulse signal is produced per propeller revolution. This signal is generated by an encapsulated reed switch (1) protected inside the meter body (2) and a permanent magnet (3) secured inside the rotating propeller carrier. A sealed cover provides a watertight housing for the reed switch, while gold plated contact pins ensure low-resistance signal passage.

The voltage must not exceed 9 V DC. Provided the impulse counters have spark-suppression circuits, the meter can be loaded with up to 1.6 watts. All our counters meet these requirements (refer to specification).

Four types of stainless steel propellers (4) can be used with this meter; all propellers are supported on two stainless steel bearings located within the propeller carrier assembly. The capillary oil passage between the stainless steel axle (5) and propeller carrier (6) limits water from entering the bearings. A locknut on the shaft (5) locates the bearings and sets the end float of the propeller carrier assembly.

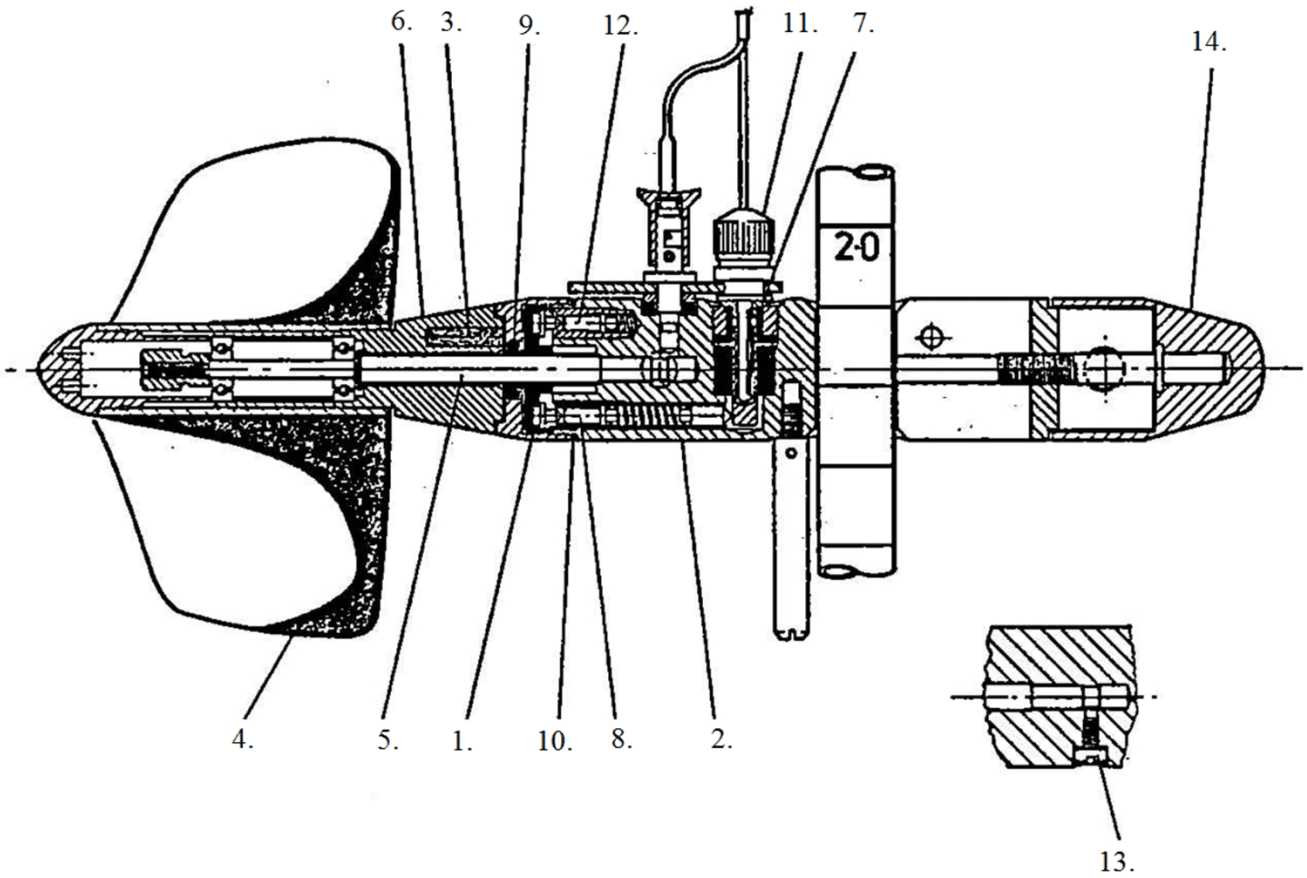

Figure 1

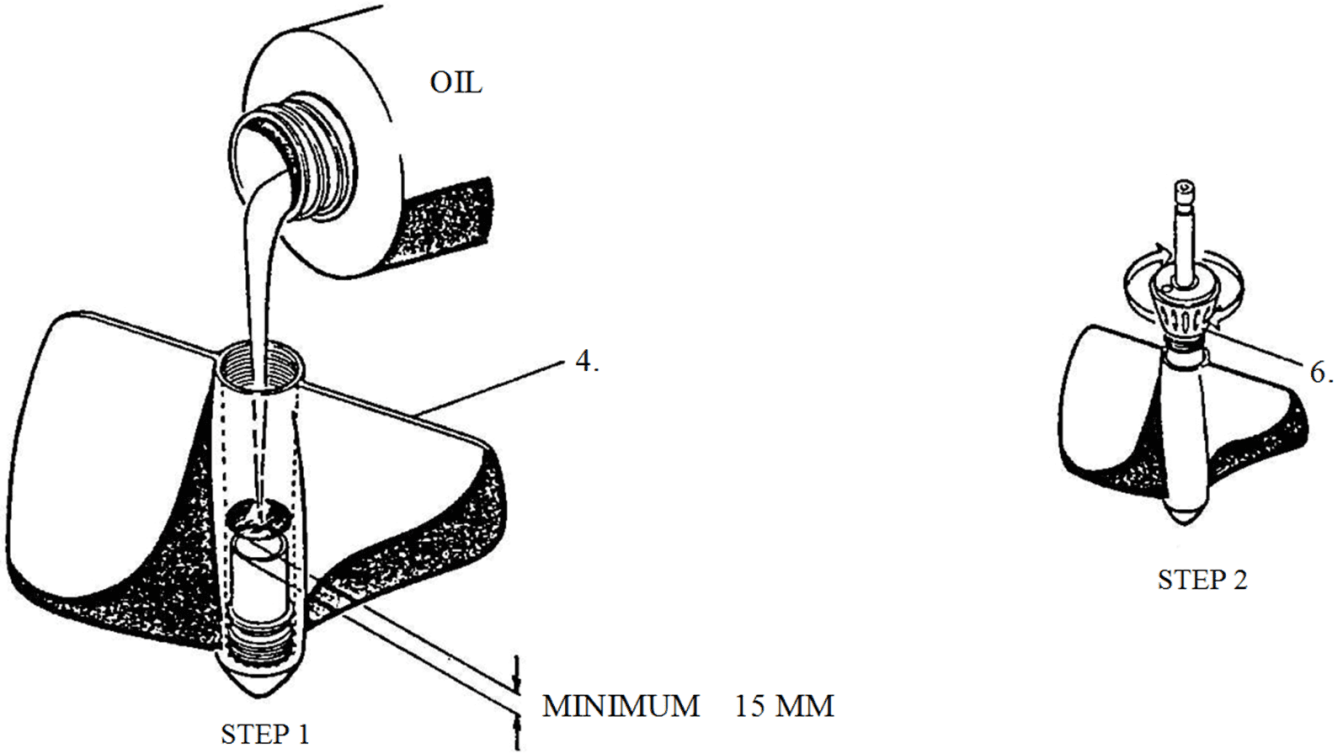

Figure 2

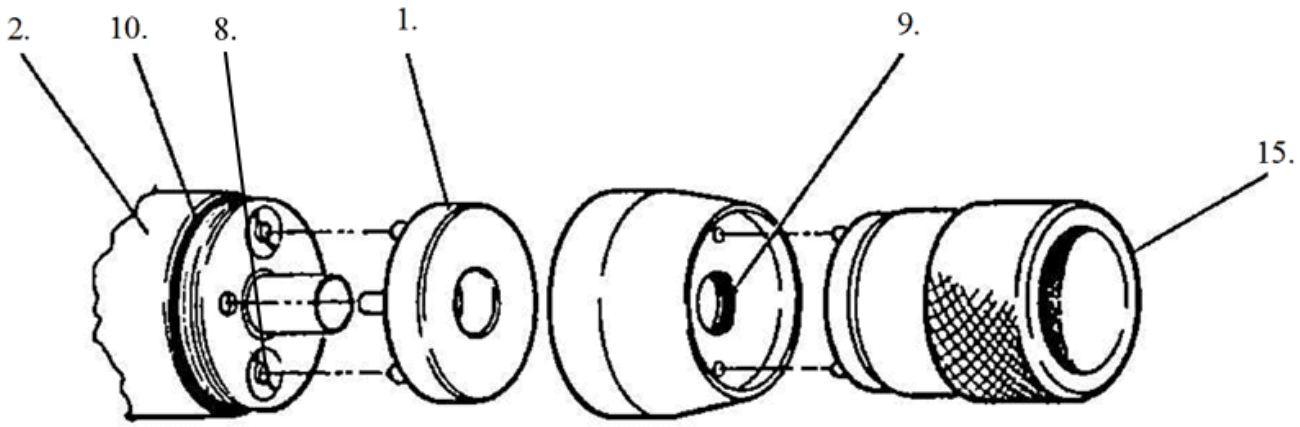

Figure 3

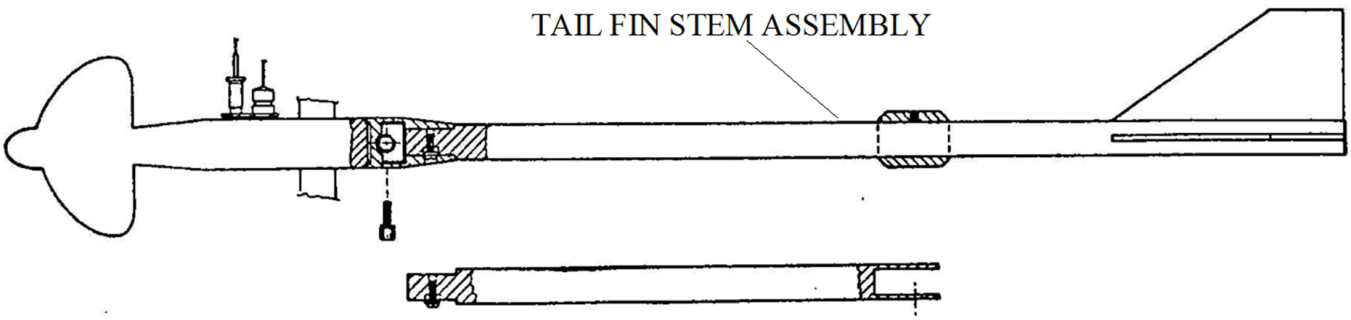

Figure 4

3 Maintenance

The maintenance of the OSS-B1 current meter can be divided in three sections as stated below. In addition, it is advisable that the user maintain the OSS-B1 current meter at all time.

- Keep the OSS-B1 case clean.
- Clean all the tools after usage.
- Use lint free paper towels and white spirit (do not use methylated).
- Office service is required for the OSS-B1 current meter about once a month if it is used on a daily basis (i.e. Fully dismantle shaft assembly, propeller carrier and propeller; Clean each item using hot soapy water and then rinse with white spirit).
- Check the lead and new the ends connections.
- If the current meter fails the spin test, refer to the mechanical fault-finding section 11 for details.
- Test lead, counter and reed switch (refer to electrical fault-finding section 11 for details).

For more information, see the following subsection:

- Service and Recalibration 10

Section 1: Before commencing a discharge measurement, the following steps should be performed

- Remove shaft protector from spindle shaft using the provided flat blade screwdriver.
- Remove propeller carrier and shaft assembly from the propeller by screwing anti-clockwise (ensure shaft assembly is placed on a clean lint free cloth to prevent contamination of the bearings).
- Fill the propeller with fresh oil and screw the propeller carrier assembly clockwise into the propeller (hand tight only).
- Re-assemble the propeller carrier assembly onto the body and secure with the retraining screw.
- Perform spin test.
- Start gauging.

Section 2: During a gauging

After every one hour of use, the current meter should be cleaned before continuing a discharge measurement.

Before f the current meter, perform a spin test to ensure the current meter has performed as expected during the last measurement.

To clean the current meter, perform the following steps:

- Remove the spare parts from the supplied cleaning container and ¾ fill with white spirit.
- Remove propeller assembly from meter body by undoing the retraining screw and separating the body from the propeller carrier assembly.
- Remove propeller carrier and shaft assembly from the propeller by screwing anti-clockwise (ensure shaft assembly is placed on a clean lint-free cloth to prevent contamination).
- Drain the old oil from the propeller into a recycling container (for environmental reasons, do not pour white spirits on the ground).
- Put the bearing end of the spindle assembly into the cleaning container and gently agitate.
- Fill up the propeller with white spirit and place your thumb over the threaded hole and shake vigorously for a few seconds.
- Pour the white spirits into a recycling container (for environmental reasons, do not pour white spirits on the ground).
- Remove the propeller spindle assembly from the cleaning container and blow dry.
- Re-assemble the spindle assembly into the propeller carrier.
- Fill the propeller with clean unused oil.
- Screw the propeller carrier assembly clockwise into the propeller (hand tight only).
- Re-assemble the propeller carrier assembly onto the body and secure with the retraining screw.
- Continue gauging.

Section 3: After the completion of gauging.

Before cleaning and storing the current meter, perform a spin test to ensure the current meter has performed as expected during the last measurement.

To clean the current meter for storage, perform the following steps:

- Remove the spare parts from the supplied cleaning container and ¾ fill with white spirit.
- Remove the propeller assembly from the meter body by undoing the retraining screw and separating the body from the propeller carrier assembly.
- Remove the propeller carrier and the shaft assembly from the propeller by screwing anti-clockwise (ensure shaft assembly is placed on a clean lint-free cloth to prevent contamination).
- Drain the old oil from the propeller in a recycling container (for environmental reasons, do not pour white spirits on the ground).
- Put the bearing end of the spindle assembly into the cleaning container and gently agitate.

- Fill the propeller with white spirit and place your thumb over the threaded hole and shake vigorously for a few seconds.
- Drain the white spirit into a recycling container (for environmental reasons, do not pour white spirits on the ground).
- Remove the propeller shaft assembly from the cleaning container and blow dry.
- Re-assemble the spindle assembly into the propeller carrier.
- Screw the propeller carrier assembly clockwise into the propeller (hand tight only).
- Fit the spindle protector onto the shaft.
- Store the propeller assembly in the carrying case.
- Drain the white spirits from the cleaning container into a recycling container (for environmental reasons, do not pour white spirits on the ground).
- Return spare parts back into the cleaning container and store in the carrying case.

3.1 Service and Recalibration

- Recalibrate the current meter every 300 hours of use or once a year whichever comes first (see KISTERS calibration certificate for details).
- For recalibration only, send the body and the propellers that require calibration (to save weight). However, if other items needs repair they can be sent with the body and propellers.
  Note: KISTERS provides a recalibration and repair service 13 for most types of current meters.

4 Troubleshooting

Mechanical Fault Finding

Symptom	Possible Causes	Action	Remark
Failed spin test	▪ Dirty or faulty bearings	▪ Clean Bearings and try to spin test again. If Problem persists replace bearings.	▪ Dirty bearings can be identified towards the end of the spin test when the propeller stops suddenly.
	▪ Bent shaft	▪ If the shaft is slightly bent return to KISTERS for repair. ▪ If the shaft is very bent return to KISTERS for replacement.	▪ Bent shaft can be identified by looking at the pointed centre of the propeller during spin test. If this point is turning off-centre this indicates that the shaft is bent.

Electrical Fault Finding

If an electrical fault has been traced to the current meter, the following conditions should be checked using a multi-meters or impulse counter.

Faults will be either CLOSED CIRCUIT or OPEN CIRCUIT. If the PVD200 counter is being used, set the time in the setup menu to 90 seconds and set the buzzer feature to 'full'. Connect the current meter to the counter's input terminals and spin the propeller. If the audible signal sounds continuously, the fault is a “CLOSED CIRCUIT”. If no audible signal is heard, the fault then is an “OPEN CIRCUIT”.

Closed Circuit Fault

Symptom	Possible Cause	Action
Fault occurs only when meter in water.	▪ Water entering contact plug receptacle and earth between plug and body	▪ Replace damaged plug or missing seal (see figure 7)
Circuit closed in any magnet position, but open with magnet removed.	▪ Reed switch failed	▪ Replace reed switch assembly (Figure 3 8)
Circuit closed without magnet in position.	▪ Reed switch damaged ▪ Water damaged during handling allowing contacts to earth onto meter body	▪ Replace reed switch assembly ▪ Remove reed switch (Figure 3 8 No.1) and insulated contact assembly (Figure 3 8 No 8). Drain or wipe away water. Flush with alcohol or methyl. Spirits, then air dry. Apply silicone grease to contact surfaces and thread on insulating sleeve before replacing. Check damaged O-rings (Figure 3 8 No 9 and10) replace. Apply silicon grease before fitting. ▪ Check for damage to spigot through reed switch assembly. Return to factory for repairs.

Open Circuit Fault

Symptom	Possible Cause	Action
Open circuit between plug (11) and insulated reed switch contact (8) (Figure	▪ Faulty plug contact. ▪ Faulty insulated contact assembly (8) (Figure 3 8).	▪ Check fit of plug in hole.

Symptom	Possible Cause	Action
3 8).		▪ Remove, wipe surface clean and check spring compression. Re-assemble with silicone grease on all surfaces.
No closure of reed switch contact when magnet in position.	▪ Damaged Reed Switch Assy.	▪ Replace.
Reed switch operating but signal not passing to body.	▪ Faulty earth contact (12) (Figure 3 8).	▪ Check spring compression. Remove assembly and wipe clean contact surfaces with silicon grease and re-assemble.

5 Repair

KISTERS precision instruments and data loggers are produced in quality-controlled processes. All KISTERS production and assembly sites in Australia, New Zealand and Europe are ISO 9001 certified. All equipment is factory tested and/or factory calibrated before it is shipped to the client. This ensures that KISTERS products perform to their fullest capacity when delivered.

Despite KISTERS most rigorous quality assurance (QA), malfunction may occur within or outside of the warranty period. In rare cases, a product may not be delivered in accordance with your order.

In such cases KISTERS' return and repair policy applies. For you as a customer, this means the following:

- Contact KISTERS using the Repair Request Form and the Declaration of Contamination made available online:

Region (Language)	Download Link
Asia–Pacific (English)	Repair Request Form (APAC) Declaration of Contamination (APAC)
Europe, the Middle East and Africa (English)	Repair Request Form (EMEA) Declaration of Contamination (EMEA)
Germany (German)	Repair Request Form (DE) Declaration of Contamination (DE)

  In response you will receive a reference number that must be referenced on all further correspondence and on the freight documents accompanying your return shipment.
- Please provide as much information and/or clear instructions within the return paperwork. This will assist our test engineers with their diagnosis.
- Please do not ship the goods prior to obtaining the reference number. KISTERS will not reject any equipment that arrives without reference number; however, it may take us longer to process.

Custom requirements for items sent to KISTERS for warranty or non-warranty repairs: Check with your national customs/tax authorities for details, processes and paperwork regarding tax exempt return of products. Typically, special custom tariff codes are available (such as HS Code = 9802.00) that verify the item is being returned for repair and has no commercial value. Please note that the customs invoice / dispatch documents should also clearly state: "Goods being returned to manufacturer for repair – No Commercial value". It is mandatory to have any returned goods accompanied by a commercial invoice on headed paper. KISTERS reserves the right to charge the customer for time spent rectifying incorrect customs documents.

Note: Please ensure that your goods are packed carefully and securely. Damage that occurs during transit is not covered by our warranty and may be chargeable.

For more information, see the following subsections:

- Replacement of Cable Ends 14
- Part List 16

5.1 Replacement of Cable Ends

Impulse Counter End and Complete Repair

a. Strip back 140 mm of main cable insulation (**1**) after shortening to new length.
b. Expose 5 mm of conductor (**2**) and twist strands tightly, then solder.
c. Slide on heat shrink sleeve (**3**), red and black identifying sleeves (**4**) and plug covers (**5**).
d. Push soldered conductors into plugs (**6**) and lock with grubscrew (**7**).
e. Bring cover forward over plugs.
f. Position heat shrink sleeve centrally over grey cable insulation and fix in place

Note: Repair to either plug end individually can be made also, by only cutting away the damaged end and following steps **b**, **d** & **e**.

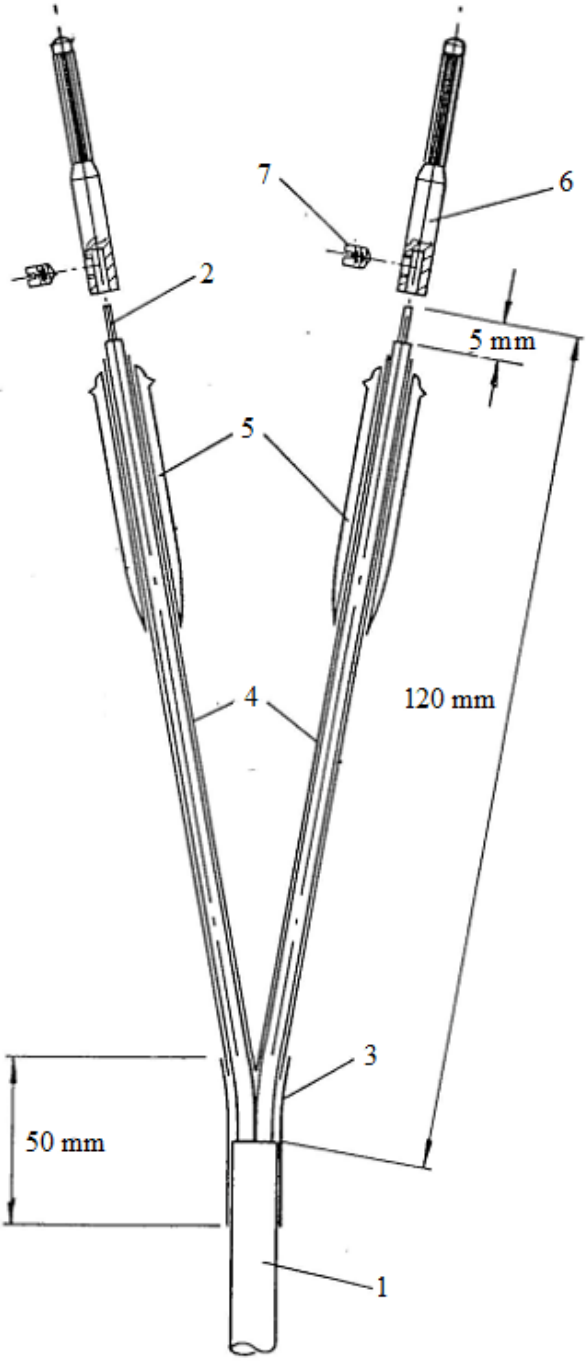

Figure 5

Current Meter Ends and Complete Repair

a. Shorten cable (**1**) to new length and strip outer insulation (**2**) to 140 mm (red plug end) and 120 mm (black plug end).
b. Expose 5 mm of conductors (**3**) and twist strands tightly, then solder.
c. Slide on heat shrink sleeve (**4**) red (**5**), and black (**6**) identifying sleeves.
d. On the positive (+) end, push plug cap (**7**), washer (**8**), rubber bush (**9**) and plug holder (**10**) over cable.
e. Lock conductor into plug pin (**11**), then slide back into plug holder and screw plug cap into place.
f. Fit rubber seal (**12**) to plug pin.
g. For the negative (-) end, slide on black heat shrink tube (**13**). Push conductor into the earth pin (**14**) and solder in place. Bring heat shrink sleeve forward onto earth pin and fix down with heat.
h. Fix down heat shrink sleeve (**4**) over main cable termination.
i. Repairs can be made individually to the positive (+) end with steps **b**, **d**, **e**, & **f** and to the negative (-) end, by following steps **b** & **g**. However, the shortened ends of the cable might be difficult to assemble conveniently onto the current meter, and it is usually preferable to reconstruct the cable as detailed in figure 6.

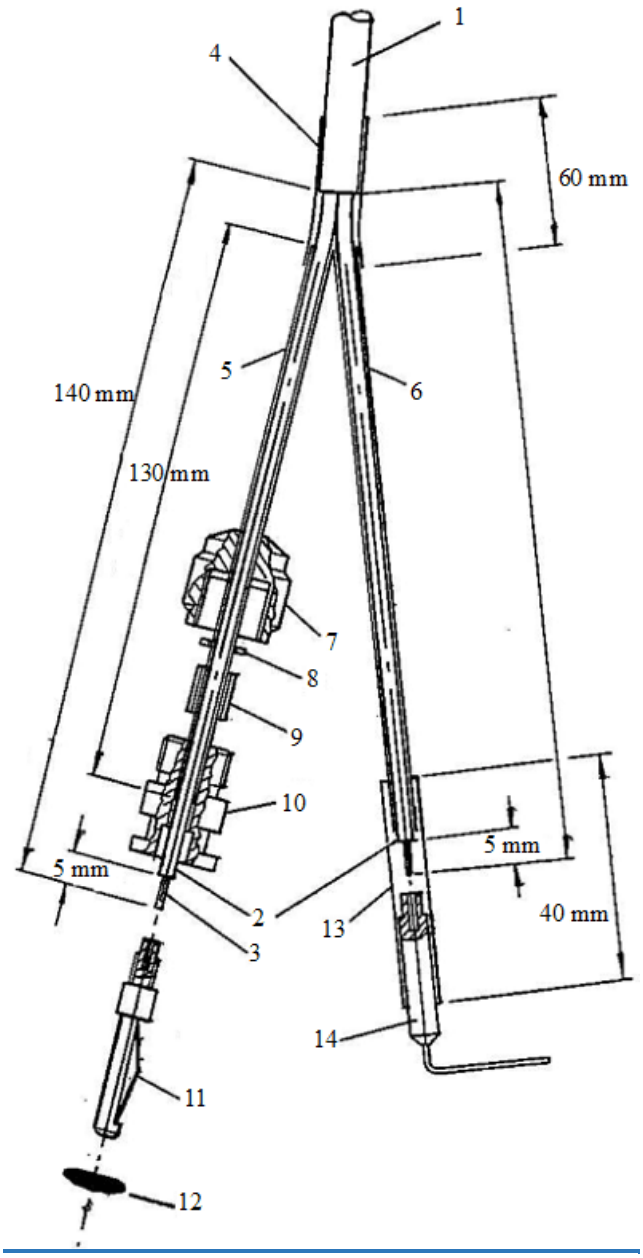

Figure 6

5.2 Part List

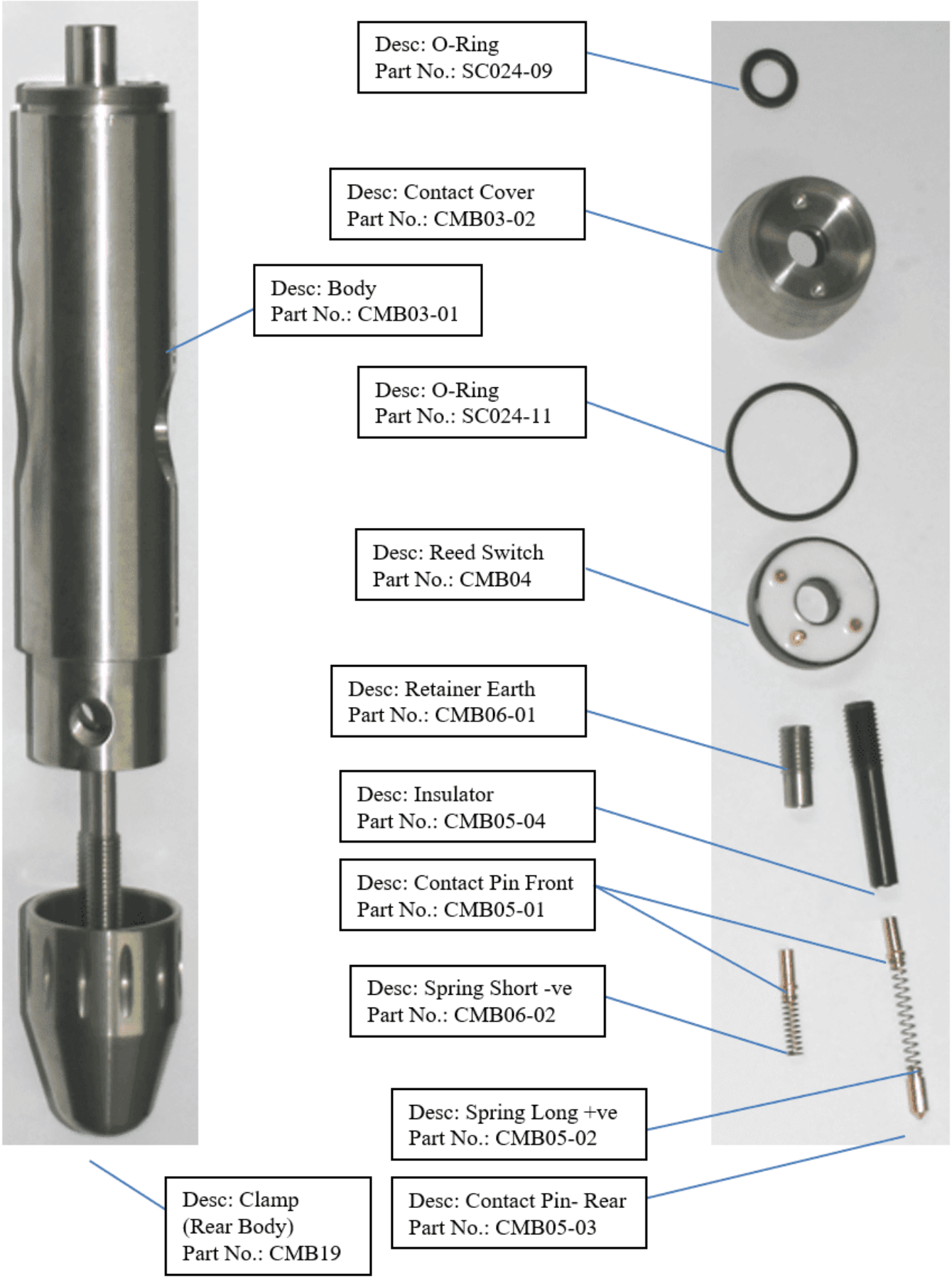
Desc: O-Ring
Part No.: SC024-09
Desc: Contact Cover
Part No.: CMB03-02
Desc: Body
Part No.: CMB03-01
Desc: O-Ring
Part No.: SC024-11
Desc: Reed Switch
Part No.: CMB04
Desc: Retainer Earth
Part No.: CMB06-01
Desc: Insulator
Part No.: CMB05-04
Desc: Contact Pin Front
Part No.: CMB05-01
Desc: Spring Short -ve
Part No.: CMB06-02
Desc: Spring Long +ve
Part No.: CMB05-02
Desc: Contact Pin- Rear
Part No.: CMB05-03
Desc: Clamp
(Rear Body)
Part No.: CMB19

Desc: Retaining Screw - Earth Post
Part No.: CMB03-08

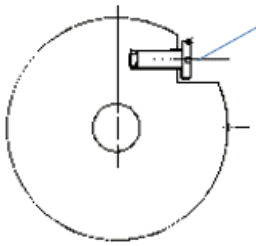

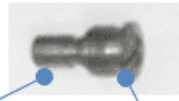

Desc: Grubscrew
Part No.: CMB03-09

Desc: Retaining Screw
Part No.: CMB03-10

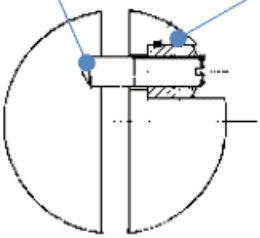

Desc: Retaining Screw - Axle
Part No.: CMB03-07

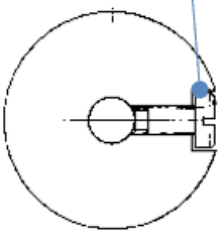

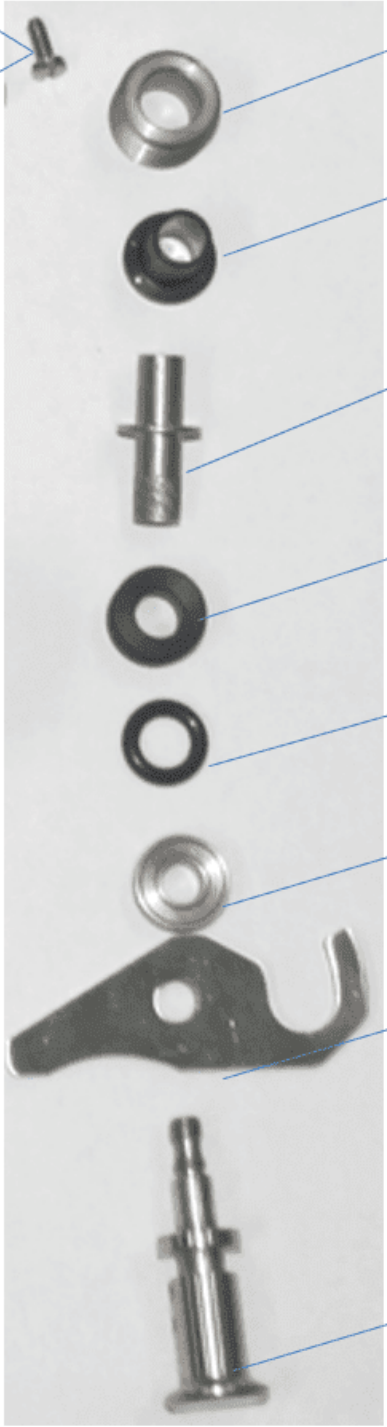

Desc: Retainer
Part No.: CMB07-01

Desc: Flanged Insulator
Part No.: CMB07-02

Desc: Receptacle
Part No.: CMB07-03

Desc: Support Insulator
Part No.: CMB07-04

Desc: O-Ring
Part No.: SC024-08

Desc: Clamp Disk Washer
Part No.: CMB08-05

Desc: Locking Lever
Part No.: CMB08-04

Desc: Earth Post
Part No.: CMB08-01/03

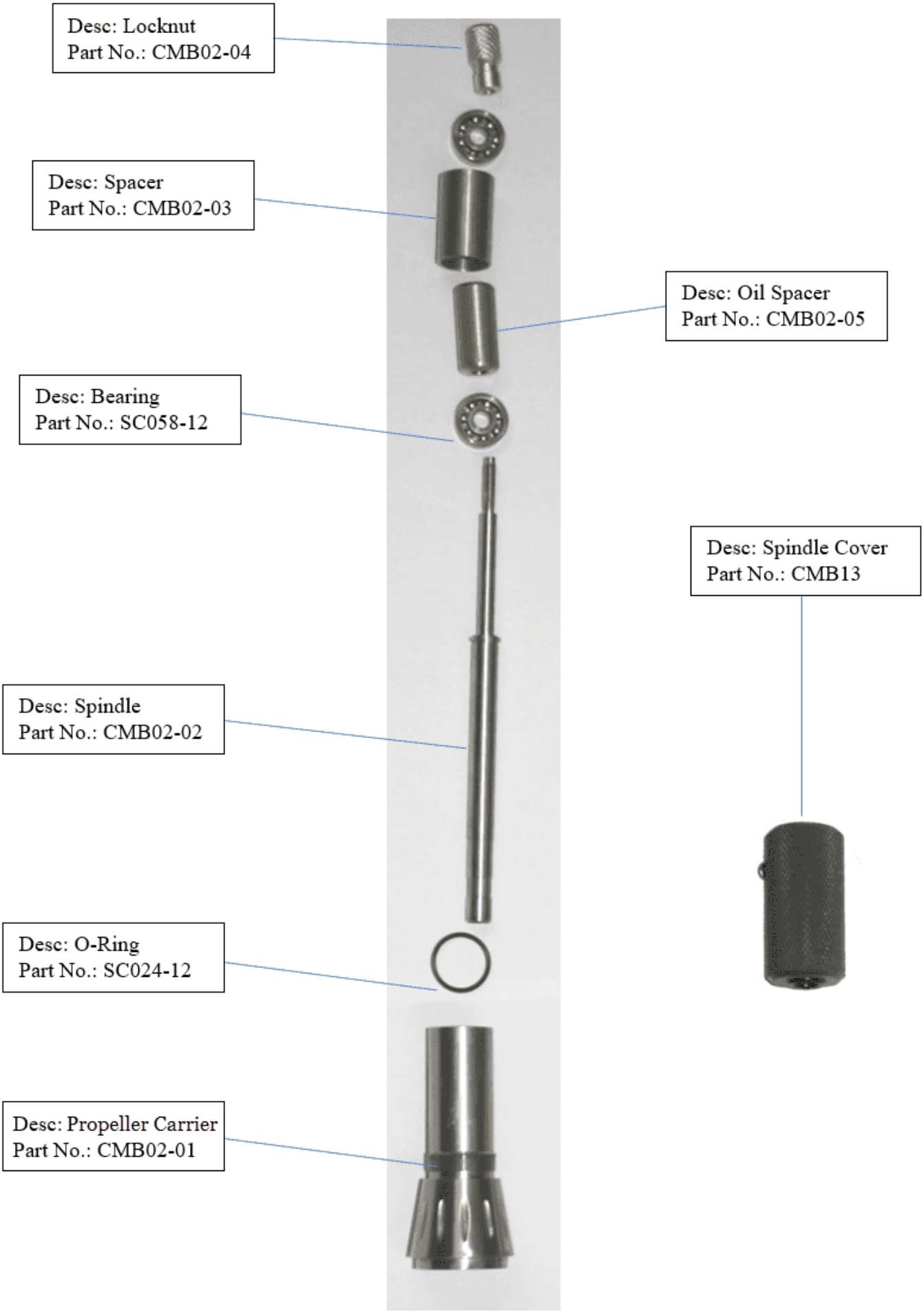
Desc: Locknut
Part No.: CMB02-04
Desc: Spacer
Part No.: CMB02-03
Desc: Oil Spacer
Part No.: CMB02-05
Desc: Bearing
Part No.: SC058-12
Desc: Spindle Cover
Part No.: CMB13
Desc: Spindle
Part No.: CMB02-02
Desc: O-Ring
Part No.: SC024-12
Desc: Propeller Carrier
Part No.: CMB02-01

4 Type of propellers available:

1- Propeller No.4 Part No. CMB01
2- Propeller No. 2 Part No. CMB17
3- Propeller No. A Part No. CMB18
4- Propeller No. 1 Part No. CMB21

Desc: Body Key
Part No.: CMB15

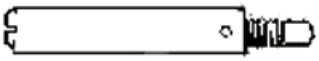

Desc: Ground Post- Propeller 80 Dia.
Part No.: CMB03-05

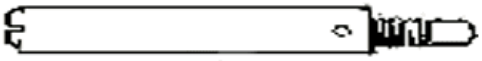

Desc: Ground Post-Propeller 125 Dia.
Part No.: CMB03-06

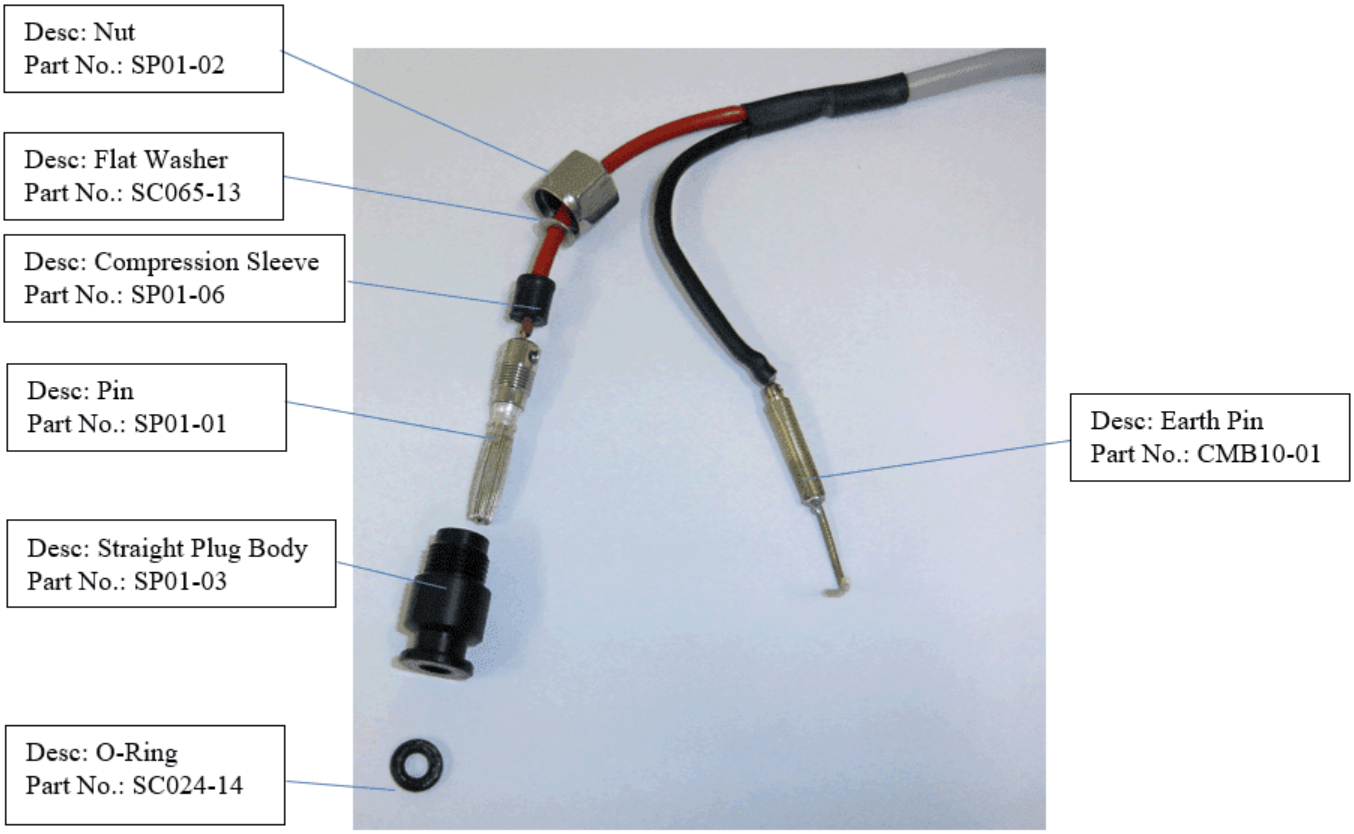
Desc: Nut
Part No.: SP01-02
Desc: Flat Washer
Part No.: SC065-13
Desc: Compression Sleeve
Part No.: SP01-06
Desc: Pin
Part No.: SP01-01
Desc: Straight Plug Body
Part No.: SP01-03
Desc: O-Ring
Part No.: SC024-14
Desc: Earth Pin
Part No.: CMB10-01

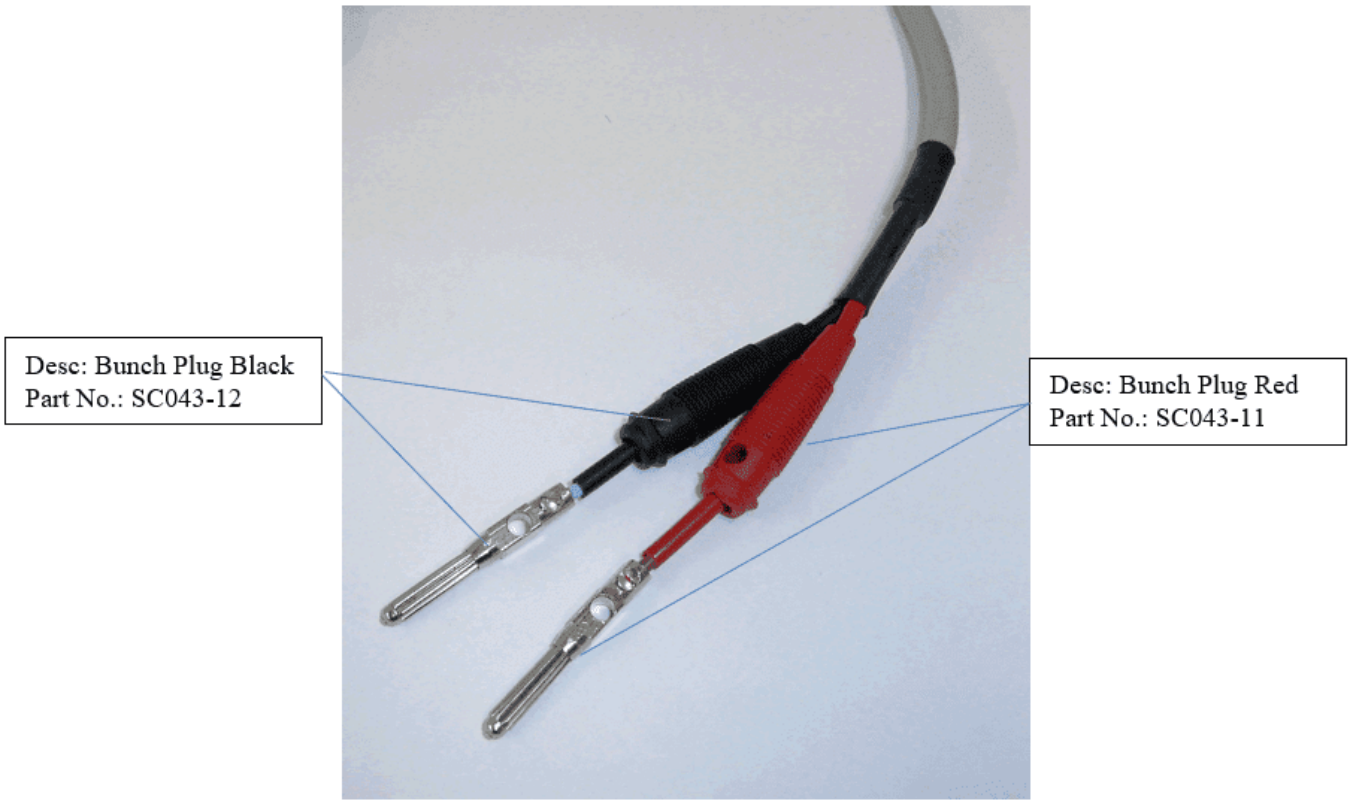
Desc: Bunch Plug Black
Part No.: SC043-12
Desc: Bunch Plug Red
Part No.: SC043-11

Universal Wading Rods & Relocating Devices

ITEM	PART NO.	QTY
1.8 METRE WADING ROD SET		
Three "W.R." series wading rod sections, stainless steel, graduations each 2 cm and markings at decimetre (10 cm) intervals. ▪ 0 – 0.6 metre ▪ 0.6 – 1.2 metres ▪ 1.2 – 1.8 metres	WRS01 WRS02 WRS03	1 1 1
Point & Foot Plate	WRS04	1
Canvas Carrying Bag	WR11	1
Fixing Screw	SAN20-04	5
Screwdriver	SC002-06	1
3 METRE WADING ROD SET		
Three "W.R." series wading rod sections, stainless steel, graduations each 2 cm and markings at decimetre (10 cm) intervals. ▪ 0 - 1 metre ▪ 1 - 2 metres ▪ 2 - 3 metres	WR01 WR02 WR03	1 1 1
Point & Foot Plate	WRS04	1
Canvas Carrying Bag for 3 m wading rod sets	WR05	1
Fixing Screw	SAN20-04	5
Screwdriver	SC002-06	1
METER RELOCATING DEVICE, STAINLESS STEEL, 1 METRE SECTION		
Rod Section	RD01	1
Locking Tool	RD03	1

Universal Wading Rods & Relocating Devices

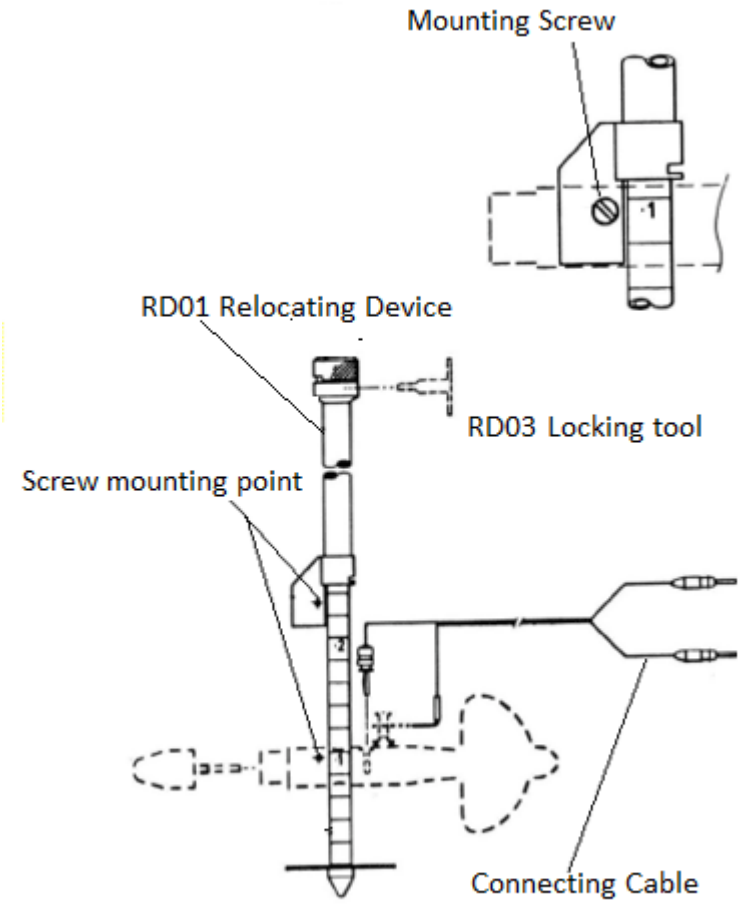

6 Technical Data

<table>
<tr><td>Calibrated Accuracy</td><td>±1 % (stated accuracy will only be maintained if serviced and calibrated according to section 3 9 of this manual)</td></tr>
<tr><td>Calibration</td><td>▪ Each current meter individually calibrated in accordance with ISO 3455: 2021
▪ Compliant with AS 3778.6.1-2022 and ISO 2537:2007
▪ Calibration certificate provided with each current meter</td></tr>
<tr><td>Propeller Specifications</td><td>The choice of propeller depends on the specifics of the site such as discharge and the geometry of the riverbed or channel. Please contact us for advice.
<table>
<tr><th>Propeller No.</th><th>Diam. × Pitch</th><th>Start Velocity (m/sec)</th><th>Max. Velocity (m/sec)</th><th>Component Effect</th></tr>
<tr><td>A</td><td>100 mm × 0.125 m</td><td>0.025</td><td>5</td><td>±45°</td></tr>
<tr><td>1</td><td>125 mm × 0.250 m</td><td>0.025</td><td>10</td><td>±5°</td></tr>
<tr><td>2</td><td>125 mm × 0.500 m</td><td>0.040</td><td>10</td><td>±5°</td></tr>
<tr><td>4</td><td>80 mm × 0.125 m</td><td>0.025</td><td>4</td><td>±5°</td></tr>
</table></td></tr>
<tr><td>Packed Dimensions & Mass (basic kit)</td><td>▪ Kit in carrying case: 500 × 400 × 200 mm; 8 kg
▪ Wading rods (1.8 m in canvas carrying bag): 700 × 100 mm; 2 kg</td></tr>
</table>

7 Obligations of the Operator and Disposal

This chapter contains the following subsections:

- Obligations of the Operator 24
- Dismantling / Disposal 24

7.1 Obligations of the Operator

European Union

In the Single European Market it is the responsibility of the operator to ensure that the following legal regulations are observed and complied with: national implementation of the framework directive (89/391/EEC) and the associated individual directives, in particular 2009/104/EC, on minimum safety and health requirements for the use of work equipment by employees at work.

Worldwide

Regulations: If and where required, operating licences must be obtained by the operator. In addition, national or regional environmental protection requirements must be complied with, regardless of local legal provisions regarding the following topics:

- Occupational safety
- Product disposal

Connections: Local regulations for electrical installation and connections must be observed.

7.2 Dismantling / Disposal

When disposing of the units and their accessories, the applicable local regulations regarding environment, disposal and occupational safety must be observed.

Before dismantling

- Electrical Devices:
  - Switch off the units.
  - Disconnect electrical appliances from the power supply, regardless of whether the appliances are connected to the mains or to another power source.
- Mechanical devices:
  - Fix all loose components. Prevent the device from moving independently or unintentionally.
  - Loosen mechanical fastenings: Please note that appliances can be heavy and that loosening the fastenings may cause them to become mechanically unstable.

Disposal

Operators of old appliances must recycle them separately from unsorted municipal waste. This applies in particular to electrical waste and old electronic equipment.

Electrical waste and electronic equipment must not be disposed of as household waste!

Instead, these old appliances must be collected separately and disposed of via the local collection and return systems.

Integrated or provided batteries and accumulators must be separated from the appliances and disposed of at the designated collection point. At the end of its service life, the lithium-ion battery must be disposed of according to legal provisions.

EU WEEE Directive

As players in the environmental market, KISTERS AG is committed to supporting efforts to avoid and recycle waste. Please consider:

- Avoidance before recycling!
- Recycling before disposal!

This symbol indicates that the scrapping of the unit must be carried out in accordance with Directive 2012/19/EU. Please observe the local implementation of the directive and any accompanying or supplementary laws and regulations.

Contact Data

Europe	KISTERS Europe	+49 2408 9385 0 hydromet.sales@kisters.eu www.kisters.eu
Australia	KISTERS Australia	+612 9601 2022 sales@kisters.com.au www.kisters.com.au
New Zealand	KISTERS New Zealand	+64 7 857 0810 sales@kisters.co.nz www.kisters.co.nz
Latin America	KISTERS Latin America	+57 350 575 4079 sales@kisters-latam.com www.kisters-latam.com
North America	KISTERS North America	+1 561 459 4876 kna@kisters.net www.kisters.net
Spain	KISTERS Ibérica	info@kisters.es www.kisters.es
France	KISTERS France	+33 1 4120 9200 info@kisters.fr www.kisters.fr
Canada	KISTERS Canada	kna@kisters.net www.kisters.net

© 2026 | KISTERS

www.kisters.eu
© 2026 | KISTERS
01/06/2026

KISTERS
Empowering decisions of tomorrow