HydroMet

User Manual

# TB3

KISTERS

Empowering decisions of tomorrow

06-2026 – 01-08-004

# Table of Contents


I Disclaimer 3

II Scope of Delivery 4

III Safety Instructions 5

Part I Introduction 6

Part II Installation 7

2.1 Unpacking your TB3 Rain Gauge ..... 7

2.2 Site Selection and Setup ..... 7

Part III Configuration 10

3.1 Calibration ..... 10

3.2 Field Calibration Device ..... 10

Part IV Operation 11

4.1 Test Operation ..... 11

4.2 Electrical ..... 11

Part V Maintenance 12

Part VI Troubleshooting 14

Part VII Repair 16

7.1 TB3 Part List ..... 17

Part VIII Technical Data 23

Part IX Obligations of the Operator and Disposal 24

9.1 Obligations of the Operator ..... 24

9.2 Dismantling / Disposal ..... 24


© 2026 | KISTERS

# I Disclaimer

The information provided in this manual was deemed accurate as of the publication date. However, updates to this information may have occurred.

This manual does not include all of the details of design, production, or variation of the equipment nor does it cover every possible situation which may arise during installation, operation or maintenance. KISTERS shall not be liable for any incidental, indirect, special or consequential damages whatsoever arising out of or related to this documentation and the information contained in it, even if KISTERS has been advised of the possibility of such damages.

Any errors found in any KISTERS product should be reported to KISTERS where every effort will be made to quickly resolve the problem.

Copyright Notice: No parts of this work may be reproduced in any form or by any means without the written permission of the publisher. KISTERS waives copyright for users to print out parts of the documentation in hard copy for their own use only.

Trademark Notice: KISTERS products and services referred to in this document are trademarks or registered trademarks of KISTERS. Other product names used may or may not be the trademarks of their respective owners.

© 2026 | KISTERS. Any rights not expressly granted herein are reserved.

This document is public.

# II Scope of Delivery

This package should contain:

- TB3 rain gauge
- TB311 5 metre connecting lead
- M4 Allen key
- 6 nylon washers

# III Safety Instructions

- Read the user manual including all operating instructions prior to installing, connecting and powering up the KISTERS TB3. The manual provides information on how to operate the product. The manual is intended to be used by qualified personnel, i.e. personnel that have been adequately trained, are sufficiently familiar with installation, mounting, wiring, powering up and operation of the product.
- Keep the user manual on hand for later reference!
- If you encounter problems understanding the information in the manual (or part thereof), please consult the manufacturer or its appointed reseller for further support.
- KISTERS TB3 is intended to be used in hydrometeorological or environmental monitoring applications.
- Before starting to work, you have to check the functioning and integrity of the system.
  - Check for visible defects on the TB3, this may or may not include any or all of the following: mounting facilities, connectors and connections, mechanical parts, internal or external communication devices, power supplies or power supply lines, etc.
  - If defects are identified that could compromise operational safety, work must be stopped immediately. This applies to defects detected both before work begins and during operation.
- Do not use the KISTERS TB3 in areas where there is a danger of explosion.
- The present user manual specifies environmental/climatic operating conditions as well as mechanical and electrical conditions. Installation, wiring, powering up and operating the KISTERS TB3 must strictly comply with these specifications.
- Perform maintenance only when tools or machinery are not in operation.
- If guards are removed to perform maintenance, replace them immediately after servicing.
- Never make any electrical or mechanical diagnostics, inspections or repairs under any circumstances. Return the product to the manufacturer's named repair centre. You can find information on how to return items for repair in the relevant section of the KISTERS website.

Disposal instructions: After taking the KISTERS TB3 out of service, it must be disposed of in compliance with local waste and environmental regulations. The KISTERS TB3 is never to be disposed of in household waste!

Inputs and outputs of the device are protected against electric discharges and surges (so-called ESD). Do not touch any part of the electronic components! If you need to touch any part, please discharge yourself, i.e. by touching grounded metal parts.

# 1 Introduction

Thank you for choosing our product. We hope you will enjoy using the device.

KISTERS manufactures, sells, installs and operates quality instrumentation, data loggers and communication technology. Products are designed with passion for environmental monitoring and with a deep understanding of the quality, accuracy and robustness needed to fulfil the requirements of measurement practitioners in the field.

The present User Manual will help you understand, install and deploy the device. If, however, you feel that a particular information is missing, incomplete or confusing, please do not hesitate to contact us for further support!

KISTERS' TB3 is a high-quality Tipping Bucket Rain Gauge for measuring rainfall and precipitation in urban and rural locations.

## Key Features

### Calibration

- Each TB3 rain gauge is individually calibrated to ISO 9001 standards. Calibration sheets can be supplied on request.

### Tipping Bucket Mechanism

- The TB3 uses a segregated bucket that tips with a specific volume of water during a rainfall event.
- Each rain gauge is designed to minimise errors caused by incomplete drainage from the bucket surfaces.
  This is achieved by:
  - Teflon-impregnated material for the bucket, reducing surface tension (Brass bucket with paint finish is available on demand).
  - The bucket assembly is fitted with a stainless steel axle and supported on dual sapphire pivots, ensuring long term stability of the tipping mechanism.

### Syphon

The integrated siphon provides high accuracy over a wide range of rainfall intensities by controlling the flow into the bucket, ensuring that each bucket tip represents the correct calculated volume.

### Measurement Resolutions

- Metric:
  - Resolutions available: 0.1 mm, 0.2 mm, 0.5 mm, 1.0 mm and .01" inches

### Reed Switch

- When the bucket tips, it closes a **double-reed contact**, generating a pulse signal. Two separate reed-switch outputs can be connected to up to 2 devices for redundant collection of rain data.
- Use the supplied cable to connect the reed switch to a local data logger that will record individual pulses.
- **Important**: The reed-switch output is **not bounce-free**, meaning noise from the mechanical action could produce false signals. Proper debouncing must be implemented in the connected data logger. KISTERS iRIS data loggers come equipped with a built-in debouncing mechanism on counter/pulse inputs to address this.

### Heating Option

- In regions prone to snowfall, an **optional temperature-controlled heater** (models TB3H or TB3H-L) can be integrated into the system to allow year-round operation, ensuring accurate rain measurement even in freezing conditions.

# 2 Installation

This chapter contains the following subsections:


- Unpacking your TB3 Rain Gauge 7
- Site Selection and Setup 7


## 2.1 Unpacking your TB3 Rain Gauge

This package should contain:

- TB3 rain gauge
- TB311/5 5 metre connecting lead
- M4 Allen Key

Please verify you have received these items and that the Tipping Bucket Rain Gauge resolution is as ordered.

To prepare the Tipping Bucket Rain Gauge for installation:

- lift the unit from the carton and place on secure surface
- remove polythene bag
- loosen the three enclosure securing screws and back them off until screw head is clear of the enclosure.
- lift the enclosure from the gauge
- carefully remove the elastic band that secures the bucket assembly during transit.

Your Tipping Bucket Rain Gauge is now ready for installation.

## 2.2 Site Selection and Setup

### Site Selection

Rainfall measurements are intended to be representative of the actual rainfall that falls on a given area. Some of the more important factors affecting the representativeness of a gauge are:

- Install the rain gauge on level ground avoiding slopes wherever possible.
- The site should have adequate protection from strong winds and mounted as close to the ground as possible. The height of the gauge orifice above the ground is a critical factor affecting the amount of precipitation collected. Measured precipitation decreases as the height of the orifice above the ground increases for the lowest few metres of the atmosphere. Conversely, if a gauge orifice is too close to the ground, precipitation from the ground can splash into the gauge during moderate to heavy rainfall. Measured precipitation decreases as the height of the orifice above the ground increases for the lowest few metres of the atmosphere. Conversely, if a gauge orifice is too close to the ground, precipitation from the ground can splash into the gauge during moderate to heavy rainfall. Placing small pebbles or stones around the rain gauge base or mounting pole can help reduce the risk of splashing.
  It is generally undesirable to place a rain gauge on a fence or pole, but this may be necessary depending on the space available or other considerations such as public areas etc.
  In snow-prone areas, the gauge should be mounted above the maximum expected snow accumulation for that area and fitted with either our TB3H high-powered heater or the TB3H-PL low-powered version.
- The site should be free of large obstructions such as buildings and trees.

**Figure 1 – Site Selection**

## Site Installation

### Ground Level

When installing the rain gauge at ground level, use the details found in Figure 2 8.

- Using the M4 Allen wrench supplied, unscrew the three enclosure fixing screws and remove the enclosure from the rain gauge.
- Drill three holes as shown in Figure 2 8 and secure the mounting anchors.
  **Note**:
  To mount the rain gauge, you will need the following hardware:
  - 3 stainless steel mounting anchors (either M6 or M8 size)
  - 6 stainless steel nuts (either M6 or M8 size)
  - 6 stainless steel flat washers
- Screw three levelling nuts and flat washers onto the mounting anchors as shown in Figure 2 8.
- Place three of the nylon washers on top of the stainless steel flat washers (One nylon washers per mounting anchor. Nylon washers supplied with the rain gauge).
- Place the rain gauge onto the mounting anchors.
- Place the three remaining nylon washers onto the mounting anchors (One nylon washers per mounting anchor. Nylon washers supplied with the rain gauge).
- Place the three remaining stainless steel flat washers on top of the nylon washers.
- Screw the three remaining securing nuts onto the mounting anchors.
- Use the integrated bubble level to adjust the three levelling nuts until the unit is level.
- Tighten the three upper securing nuts.
- Use a small screwdriver to attach one end of the supplied connection cable to the terminals of the rain gauge's reed switch, as shown in Figure 4 11.
- Connect the other end of the connection cable to the recording device according to the manufacturer's instructions.
- Remove the rubber band securing the tipping bucket during transport and fit the outer enclosure using the supplied M4 Allen key.

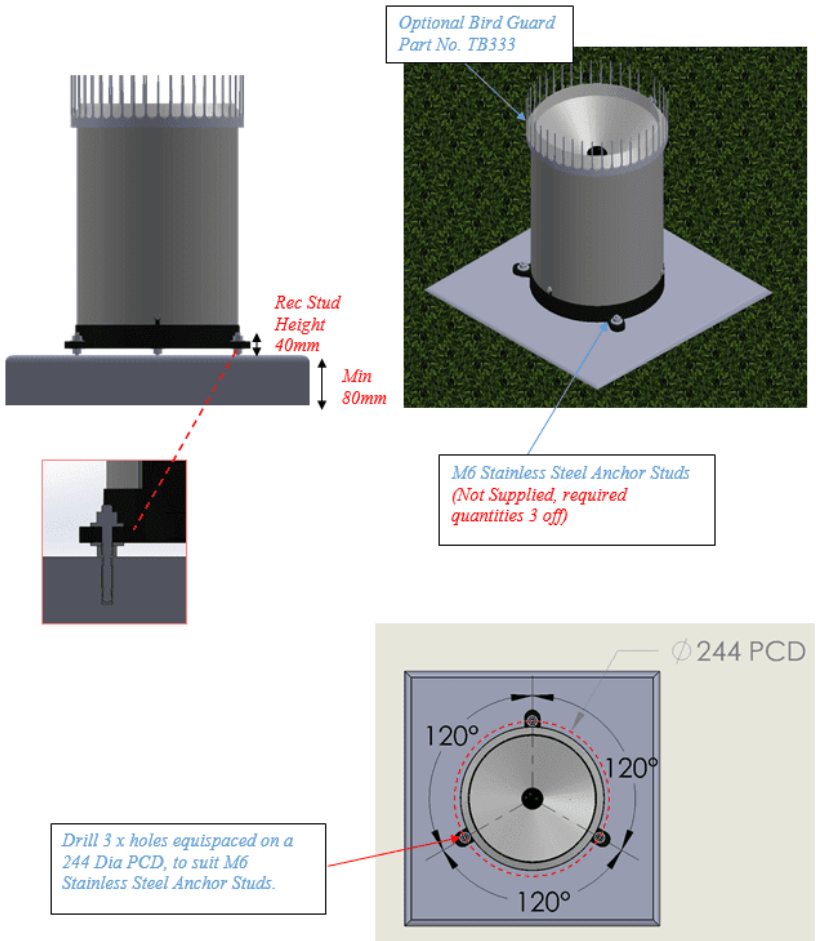


**Figure 2 – Ground Level Installation**

### Pole Mount

If pole mounting is the preferred method, use the details in Figure 3 9.

- Secure the 1800 mm mounting pole approximately 600 mm below ground level (note that the 2" BSP threaded end of the pipe must be at the top above ground level).
- Screw the optional TB334/Series 2 mounting bracket onto the mounting pole.
- Remove the upper M8 securing nut and flat washer from all three mounting bolts.
- Place three of the nylon washers supplied with the rain gauge onto the mounting bolts.
- Using the M4 Allen wrench supplied, unscrew the three enclosure securing screws and remove the enclosure from the rain gauge.
- Place the rain gauge onto the mounting bracket.
- Place the three remaining nylon washers onto the mounting bolts.
- Place the three previously removed M8 flat washers on top of the nylon washers.
- Screw the three remaining M8 securing nuts onto the mounting bolts.
- Use the integrated bubble level to adjust the three levelling nuts until the unit is level.
- Tighten the three upper M8 securing nuts.
- Use a small screwdriver to attach one end of the supplied connection cable to the terminals of the rain gauge's reed switch, as shown in Figure 4 11.
- Connect the other end of the connection cable to the recording device according to the manufacturer's instructions.
- Remove the rubber band securing the tipping bucket during transport and fit the outer enclosure using the supplied M4 Allen key.

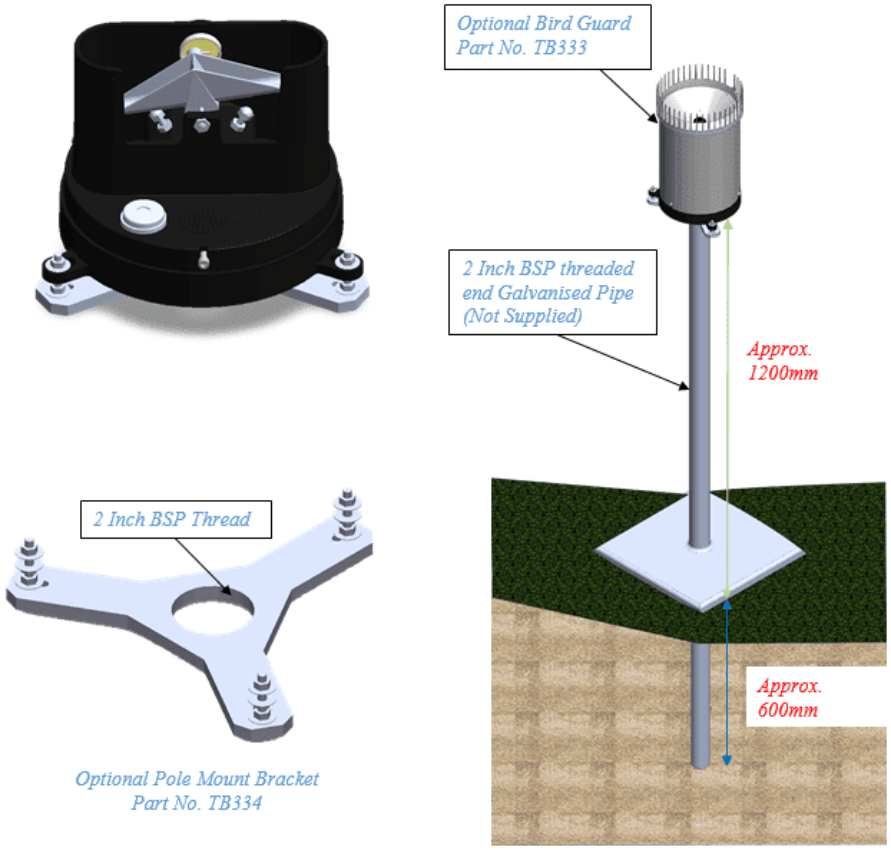


**Figure 3 – Pole Mount Installation**

### Important Notice:

The six nylon washers are supplied with each rain gauge for the following reasons:

- To prevent scratching the paint on the base and exposing the base to external, harsh and corrosive environments.
- To prevent the stainless steel bolt and washers from damaging the paint on the aluminium base and causing galvanic corrosion between the stainless steel and aluminium.

**Note**: Stainless steel bolts and nuts are supplied with the mounting plate, part no. TB334/Series 2. This item is supplied as an accessory and is not part of the rain gauge kit.

# 3 Configuration

This chapter contains the following subsections:


- Calibration 10
- Field Calibration Device 10


## 3.1 Calibration

All gauges are calibrated by KISTERS before despatch.

The following products and services are available from KISTERS:

- Field Calibration Device, Model FCD, for routine field check verification.
- Laboratory Calibration Unit, Model TB340A, for complete in-house calibration. TB340A is supplied with custom calibration software (see website for details).
- Recalibration service at the KISTERS factory.

Please contact KISTERS or your local distributor for further information.

## 3.2 Field Calibration Device

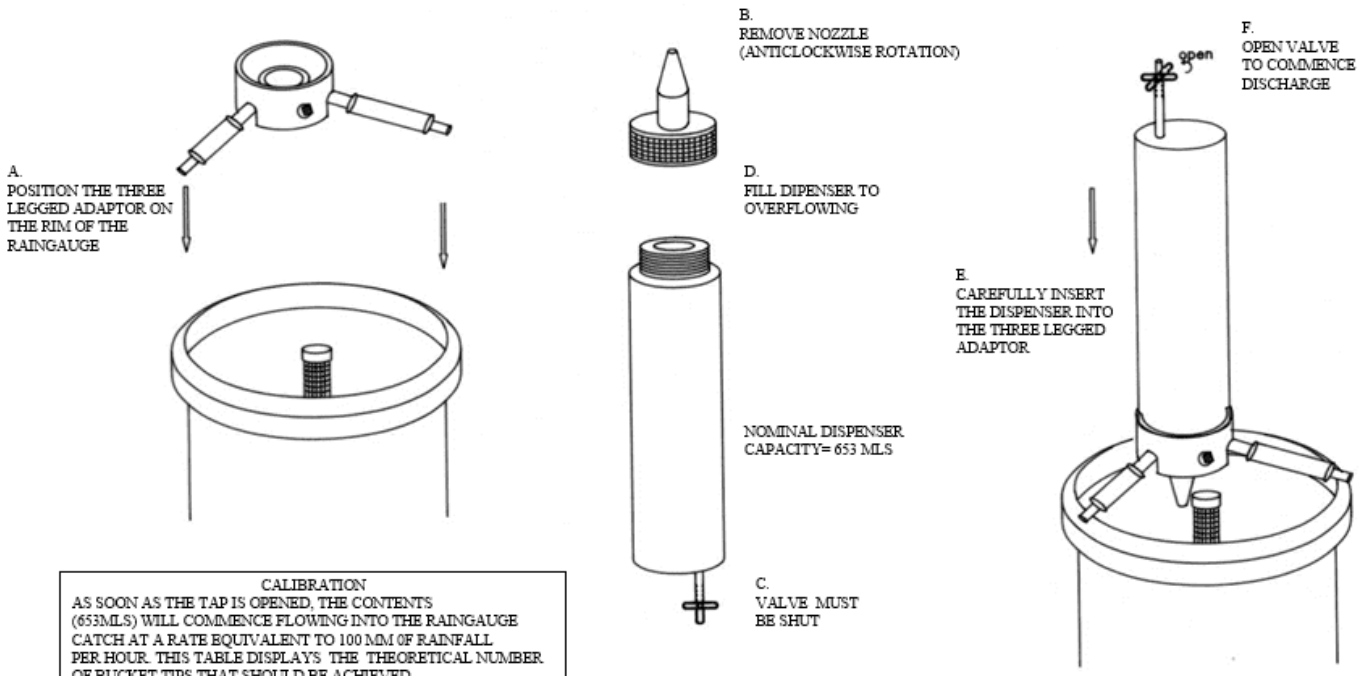


| CALIBRATION<br>AS SOON AS THE TAP IS OPENED, THE CONTENTS (653MLS) WILL COMMENCE FLOWING INTO THE RAINGAUGE CATCH AT A RATE EQUIVALENT TO 100 MM 0F RAINFALL PER HOUR. THIS TABLE DISPLAYS THE THEORETICAL NUMBER OF BUCKET TIPS THAT SHOULD BE ACHIEVED. | | |
|---|---|---|
| THEORETICAL NUMBER OF TIPS | | |
| BUCKET SIZE | 200 MM CATCH | 203 MM (80 ) |
| 0.2 MM | 103.9 | 100.9 |
| 0.5 MM | 41.6 | 40.4 |
| 1.0 MM | 20.8 | 20.2 |
| 0.01 INCH | 81.8 | 79.4 |
| IF THE OBSERVED RESULTS ARE UNACCEPTABLE THEN REFER TO THE RAINGAUGE INSTRUCTION MANUAL FOR APPROPRIATE ADJUSTMENTS | | |

**INSTRUCTION FOR TIPPING BUCKET**

**RAINGAUGE FCD FIELD CALIBRATOR**

# 4 Operation

This chapter contains the following subsections:


- Test Operation 11
- Electrical 11


## 4.1 Test Operation

- Manually tip the bucket a number of times, ensuring that each tip is being recorded and that the tilting mechanism is operating freely.
- Replace and secure the enclosure.

## 4.2 Electrical

Dual reed switches are provided for several reasons:

- Two isolated switches permit the control of two separate circuits; e.g. a local counter and a telemetry circuit.
- Parallel connection of both switches increases the current carrying capacity of the contact system if required.
- Parallel switch operation offers a degree of redundancy in locations where data from the rain gauge is critical to flood warning etc.

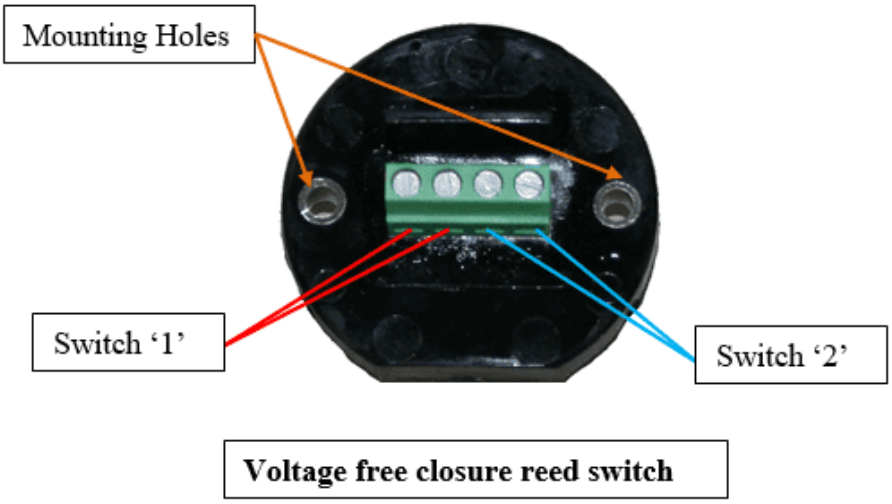


**Figure 4 – Wiring Diagram**

# 5 Maintenance

The following items should be checked regularly for cleanliness:

- Catch filter - remove and clean with methylated spirits, do not use soapy water or oil based products.
- Syphon (refer Figure 5 13).
- Interior of bucket - use methylated spirits and a soft brush.
- Ensure rain gauge is level using the bubble level fitted to the base and adjust if necessary.
- Enclosure locking screws - lightly lubricate after cleaning.
- Check that all insect screens are free of debris.

### Syphon Dismantling Details

- Unscrew the brass nut using a 10 mm spanner.
- Gently push down on the threaded end of the siphon stem until the stem pops out of the siphon body.
- Remove the syphon stem from the syphon body.
- Unscrew the syphon cap from the syphon stem.
- Inspect O-ring and replace if necessary.
- Clean all items with methylated spirits using a soft brush.

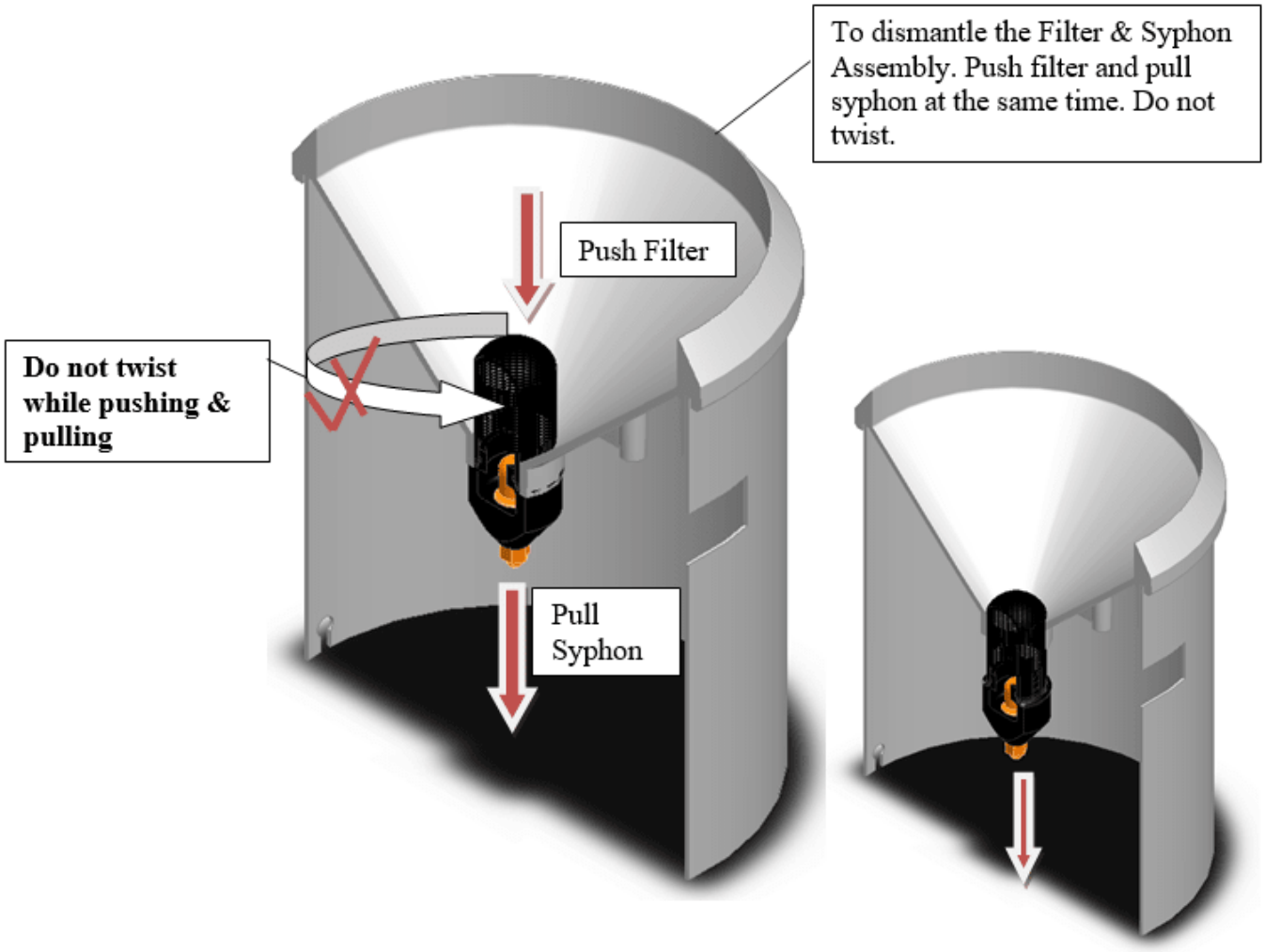

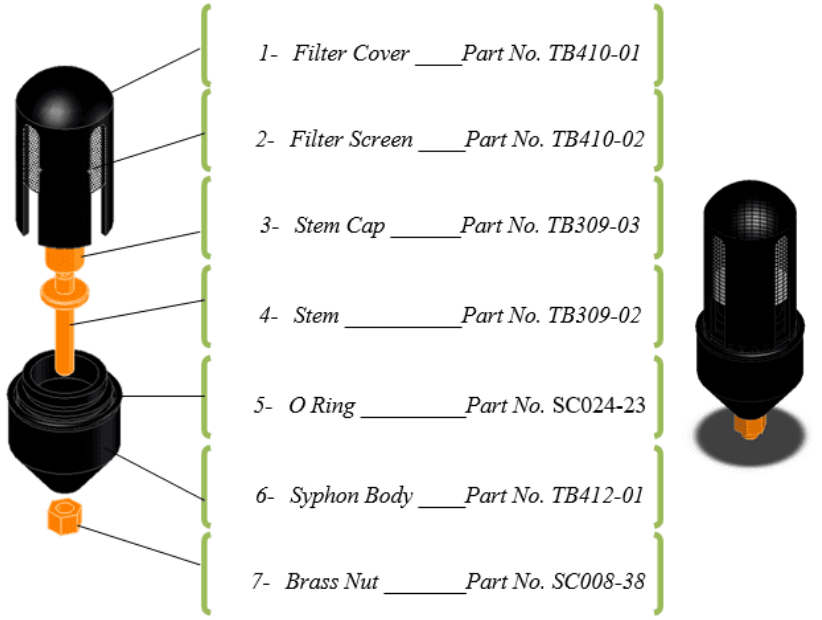


**Figure 5 – Syphon**

### Assembly Details

- Screw the syphon cap onto the syphon stem. Finger-tight only.
- Push the syphon stem into the syphon body.
- Replace the brass nut and tighten with a 10 mm spanner. Do not over tighten.

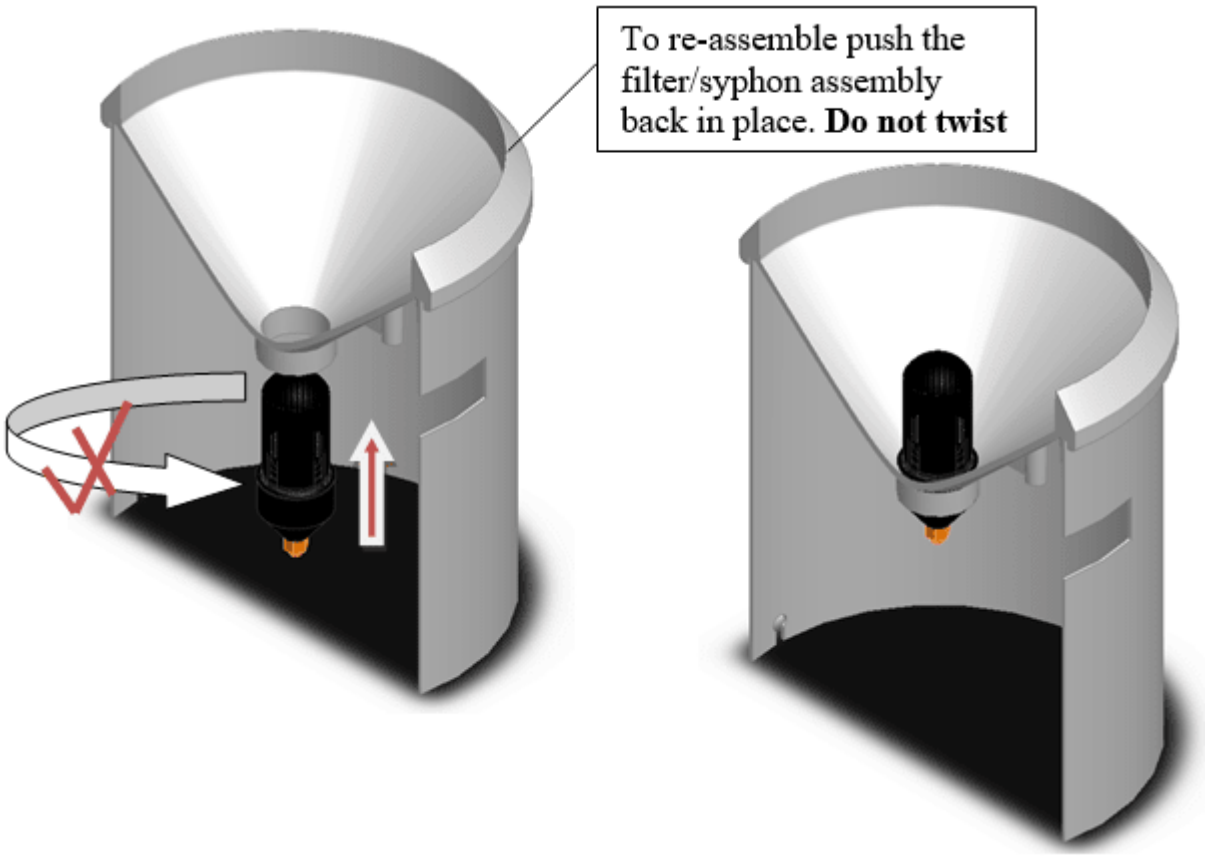

# 6 Troubleshooting

KISTERS TB3 tipping bucket rain gauges (TBRG) are commonly used to measure rainfall by capturing water in a small bucket that tips once a certain amount of water has accumulated, sending a signal to a data logger or other recording device.

If the troubleshooting steps do not resolve the issue, contact KISTERS or the re-seller for support. Customer support may recommend additional diagnostic steps or be able to offer repairs or replacements.

| Issue | Possible Cause | Solution |
|---|---|---|
| No tips recorded | Debris blockage, reed switch failure, no signal | Clean debris, test switch, check connections |
| Tips recorded too frequently | Faulty switch, bucket imbalanced, vibrations | Replace switch, check level, reduce vibrations |
| Rainfall measurement too low | Calibration issue, blockage, evaporation, freezing | Recalibrate, clear blockage, adjust for temperature |
| Rainfall measurement too high | Miscalibration, false tipping from wind or vibrations | Recalibrate, install wind shield, check for mechanical measures to reduce vibrations (damping) |
| Evaporation reducing rainfall totals | High temperatures, inappropriate bucket resolution | Switch to more a bucket resolution that is better adapted to high temperatures |
| Freezing preventing bucket from tipping or snow piling up in the funnel | Temperatures below roughly 4 °C (32.9 °F) | Equip rain gauge with a KISTERS TB3 Heater |
| Data not recording | Connection issue, faulty logger | Check cables, reset/reboot logger, check settings |

### Installation and Environmental Issues

- **Levelling**: Ensure that the rain gauge is correctly aligned horizontally using the bubble level built into the base of the TB3 to ensure correct alignment for proper operation of the tipping mechanism. The KISTERS Pole Mount Bracket allows for easy installation on externally threaded 2” poles. The mounting hardware supplied allows easy adjustment of the TB3 base.
- **Open outlets**: Water from each bucket tip drains through the outlets located in the TB3 base. Ensure that there are no obstructions to the two outlets to allow the collected rainwater to drain away easily and quickly.
- **Installation Site**:
  - **Distance**: Rain gauges must be installed at a minimum distance of two times the height of the nearest natural or man-made obstacle. For each monitoring site, it is recommended to check the surroundings to make sure the above conditions is still met (trees grow, buildings or walls have been erected, …).
  - **Sources of Debris**: The installation site should ideally be free of trees and bushes, as leaves can clog the catch area. Other sources of debris (including dust) that should be avoided or do require more frequent maintenance: landfills, extraction sites, quarries, industrial plants releasing dust particles into the air, etc.
  - **Vibration or Movement**: If the rain gauge is installed in a location that experiences vibration (from nearby machinery, for example), this could cause inaccurate tipping.
- **Environmental Factors**
  - **Wind Effects**: High winds can cause the bucket to tip prematurely or inaccurately. If you are in a particularly windy area, consider installing a wind shield or protective barrier around the rain gauge.
  - **Temperature**:
    - **Freezing**: Water can freeze in the funnel or bucket of the rain gauge when temperatures drop below 4 °C (39.2 °F). This can block the tipping mechanism, cause the gauge to under-report rainfall, or damage the gauge over time. For KISTERS TB3 rain gauges heaters are optionally available - contact the local re-seller for details. A heater will prevent water from freezing inside the funnel or bucket. In addition, heating can be used to melt down snow collected in the funnel: measures the water content equivalent of the collected snow.
    - **Evaporation**: During periods of high temperature, water collected in the funnel or bucket can evaporate before the tipping mechanism is triggered. This can result in under-reporting of rainfall, especially in dry, hot climates. Ensure that the tipping bucket’s resolution (amount of rain required to tip the bucket) is appropriate for local temperature

conditions. Note that the funnel of a KISTERS TB3 is designed as to minimize evaporation by reducing the exposed surface area of the water.

### Check for Physical Obstructions

- **Debris Blockage**: Leaves, dirt, insects, or other debris may obstruct the rain collector or the tipping mechanism. Check the funnel, the bucket area, and the drainage hole for any blockages. Clean out the funnel and bucket if necessary.
- **Ice or Snow**: In cold weather, ice or snow can block the bucket from tipping. Ensure the system is free from frozen precipitation.
- **Insects or Spiders**: Although the TB3 base and enclosure are fitted with insect screens, small insects may nest inside the tipping mechanism and cause it to malfunction. KISTERS TB3 rain gauges are also equipped with a finger filter to limit the chance of debris blocking the catch area.
- Filter-protected ventilation and drainage holes also limit the ingress of insects, however small insects may occasionally enter the rain gauge and should be removed when servicing the rain gauge.

### Test the Tipping Mechanism

- **Manual Tipping Test**: Carefully tip the bucket by hand to check that it can move freely and that the electrical contacts or magnetic switch operate correctly.
- **Bucket Alignment**: Ensure that the bucket is balanced and tips freely without catching or dragging on any surface.
- **Magnet and Reed Switch**: The tipping action is detected when the magnet mounted to the bucket passes the reed switches housed inside the reed switch assembly. Make sure that the switch is closed when the bucket is tilted.
  - **Dual Reed Switch**: KISTERS TB3 are equipped with a dual reed switch. In a situation where one side of the reed switch fails, connection to the second reed switch can be made to restore normal operation. Damaged reed switches should be replaced with a new reed switch - spare parts and repair services are available from KISTERS.

### Check Electrical Connections

- **Loose or Corroded Wires**: Inspect all electrical connections for signs of corrosion, wear, or loose connections. Clean and secure all connections.
- **Signal Output Test**: Use a multimeter to check if the switch closes when the bucket tips. If no switching is detected the reed switch might be faulty.

### Inspect the Housing

- **Cracks or Leaks**: Inspect the bucket for cracks or leaks, as these can cause an inaccurate measurement of rainfall.
- **Loose Screws**: Check for loose screws or other mechanical issues that could affect the operation of the bucket.

### Calibration Issues

- **Calibration Test**: The rain gauge verification should be performed during each site visit to ensure the continued accuracy of the rain gauge. To confirm that the rain gauge is measuring rainfall accurately, we recommend using one of the optional KISTERS Field Calibration Devices (FCD). The use of FCD allows the operator to follow a standardised and field-proven process to ensure the collection of quality data.

### Test Data Logger or Recording Device

- If the tipping mechanism seems to work correctly, but the data is not recording, check the logging device for issues such as software errors, connection issues, or memory capacity.
  - **Signal Reception**: Ensure the data logger or recording device is receiving signals from the tipping bucket.
  - **Logger input channel configuration**: Check the input channel configuration. KISTERS TB3 use a reed switch and need to be connected to a counter input on the data logger. The input channel must be properly configured - please check the manual/documentation provided by the data logger manufacturer for details.
  - **Engineering units**: Settings in the data logger must properly align with the selected/installed KISTERS TB3 model.

| | | |
|---|---|---|
| Metric units | KISTERS TB3 bucket resolution: 0.1 mm, 0.2 mm, 0.5 mm and 1.0 mm | ▪ TB3/0.1 for 0.1 mm<br>▪ TB3/0.2 for 0.2 mm<br>▪ TB3/0.5 for 0.5 mm<br>▪ TB3/1.0 for 1.0 mm |
| Imperial units | KISTERS TB3 bucket resolution 0.01 inch | ▪ TB3/0.01 for 0.01 inch |

# 7 Repair

KISTERS precision instruments and data loggers are produced in quality-controlled processes. All KISTERS production and assembly sites in Australia, New Zealand and Europe are ISO 9001 certified. All equipment is factory tested and/or factory calibrated before it is shipped to the client. This ensures that KISTERS products perform to their fullest capacity when delivered.

Despite KISTERS most rigorous quality assurance (QA), malfunction may occur within or outside of the warranty period. In rare cases, a product may not be delivered in accordance with your order.

In such cases KISTERS' return and repair policy applies. For you as a customer, this means the following:

- Contact KISTERS using the Repair Request Form and the Declaration of Contamination made available online:

| Region (Language) | Download Link |
|---|---|
| Asia-Pacific (English) | Repair Request Form (APAC)<br>Declaration of Contamination (APAC) |
| Europe, the Middle East and Africa (English) | Repair Request Form (EMEA)<br>Declaration of Contamination (EMEA) |
| Germany (German) | Repair Request Form (DE)<br>Declaration of Contamination (DE) |

  In response you will receive a reference number that must be referenced on all further correspondence and on the freight documents accompanying your return shipment.
- Please provide as much information and/or clear instructions within the return paperwork. This will assist our test engineers with their diagnosis.
- Please do not ship the goods prior to obtaining the reference number. KISTERS will not reject any equipment that arrives without reference number; however, it may take us longer to process.

Custom requirements for items sent to KISTERS for warranty or non-warranty repairs: Check with your national customs/tax authorities for details, processes and paperwork regarding tax exempt return of products. Typically, special custom tariff codes are available (such as HS Code = 9802.00) that verify the item is being returned for repair and has no commercial value. Please note that the customs invoice / dispatch documents should also clearly state: "Goods being returned to manufacturer for repair – No Commercial value". It is mandatory to have any returned goods accompanied by a commercial invoice on headed paper. KISTERS reserves the right to charge the customer for time spent rectifying incorrect customs documents.

**Note**: Please ensure that your goods are packed carefully and securely. Damage that occurs during transit is not covered by our warranty and may be chargeable.

## 7.1 TB3 Part List

| Rain Gauge Part No. | Rain Gauge Description |
|---|---|
| TB3/0.2/M | Tipping Bucket Rain Gauge, bucket capacity 0.2 mm, brass bucket with paint finish |
| TB3/0.01/M | Tipping Bucket Rain Gauge, bucket capacity 0.01 inch, brass bucket with paint finish |
| TB3/0.5/M | Tipping Bucket Rain Gauge, bucket capacity 0.5 mm, brass bucket with paint finish |
| TB3/1.0/M | Tipping Bucket Rain Gauge, bucket capacity 1.0 mm, brass bucket with paint finish |
| TB3/0.2/T | Tipping Bucket Rain Gauge, bucket capacity 0.2 mm, bucket type Teflon impregnated, injection moulded, non-hydroscopic, UV Stabilised ASA polymer bucket |
| TB3/0.01/T | Tipping Bucket Rain Gauge, bucket capacity 0.01 inch, bucket type Teflon impregnated, injection moulded, non-hydroscopic, UV Stabilised ASA polymer bucket |
| TB3/0.5/T | Tipping Bucket Rain Gauge, bucket capacity 0.5 mm, bucket type Teflon impregnated, injection moulded, non-hydroscopic, UV Stabilised ASA polymer bucket |

## TB3 Base Part List

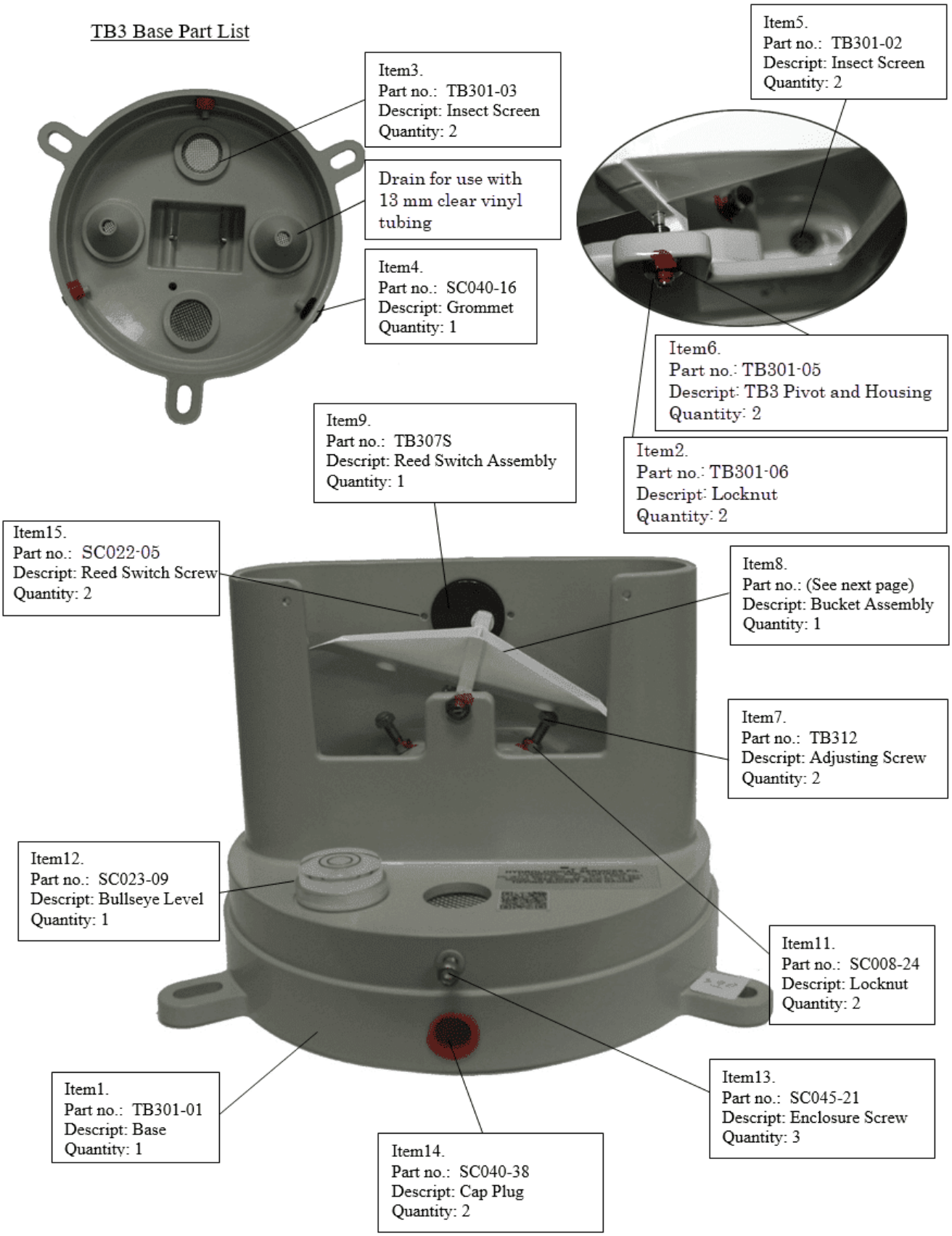

## TB3 Bucket Part List

Item17:

Part no: TB304
Descript: Bucket (0.2mm, 0.01")
or
Part no: TB305
Descript: Bucket (0.5mm)
or
Part no: TB306
Descript: Bucket (1.0mm)

Quantity: 1

Item18:
Part no: TB304-03
Descript: Bucket Axle
Quantity: 1

Metal Bucket

**OR**

Item17a:

Part no: TB304/0.2P/TEF
Descript: Bucket (0.2mm, 0.01")
or
Part no: TB305/0.5P/TEF
Descript: Bucket (0.5mm)

Quantity: 1

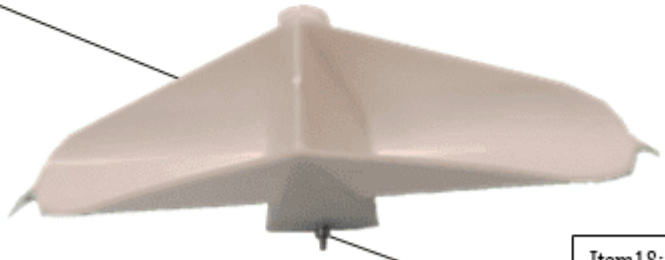

Item18:
Part no: TB304-03
Descript: Bucket Axle
Quantity: 1

Teflon Impregnated
ASA Polymer Bucket

## Syphon Part List

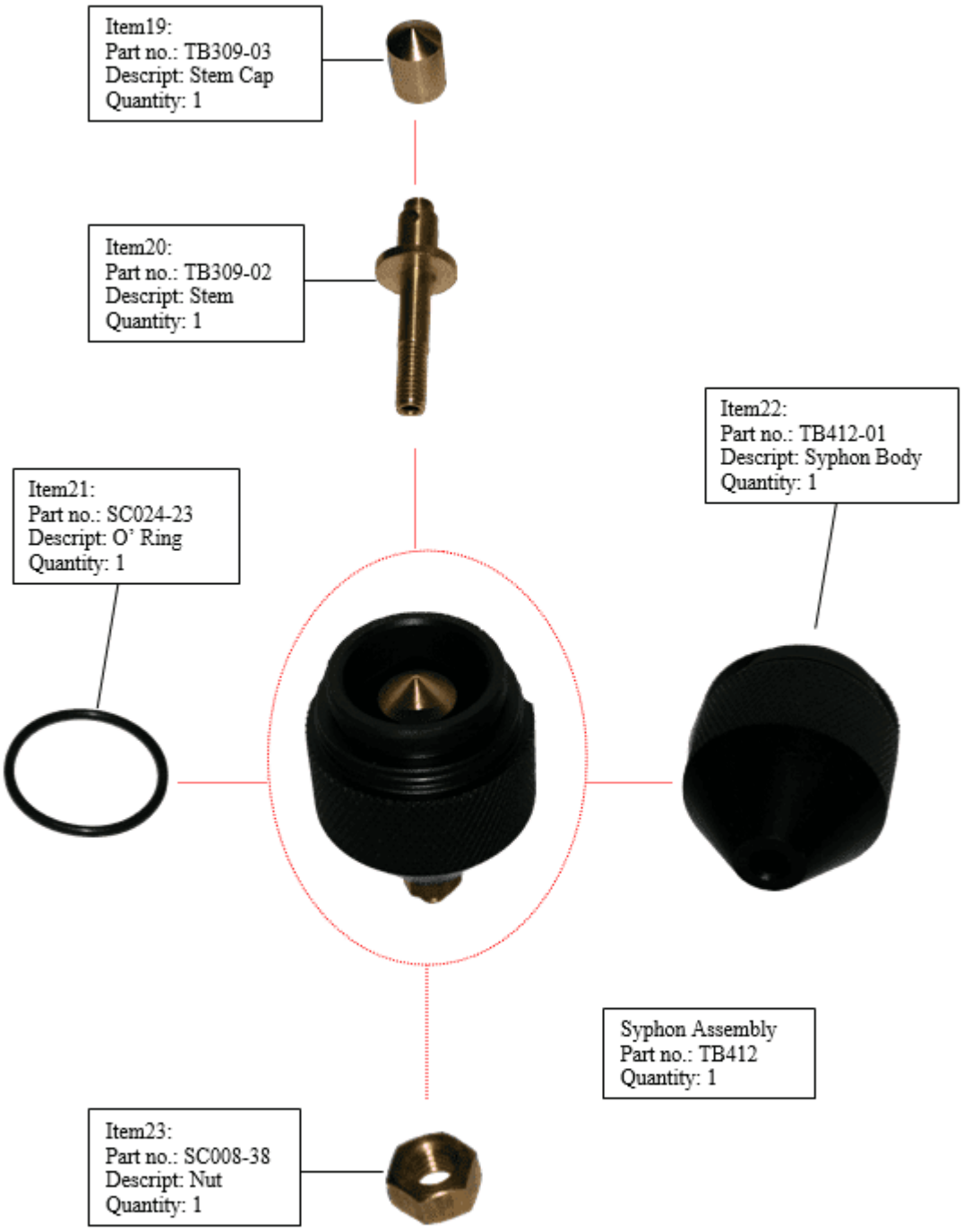


**Note:**
**This Syphon is used for TB3 0.2mm, 0.5 mm and 0.01" capacity rain gauges**

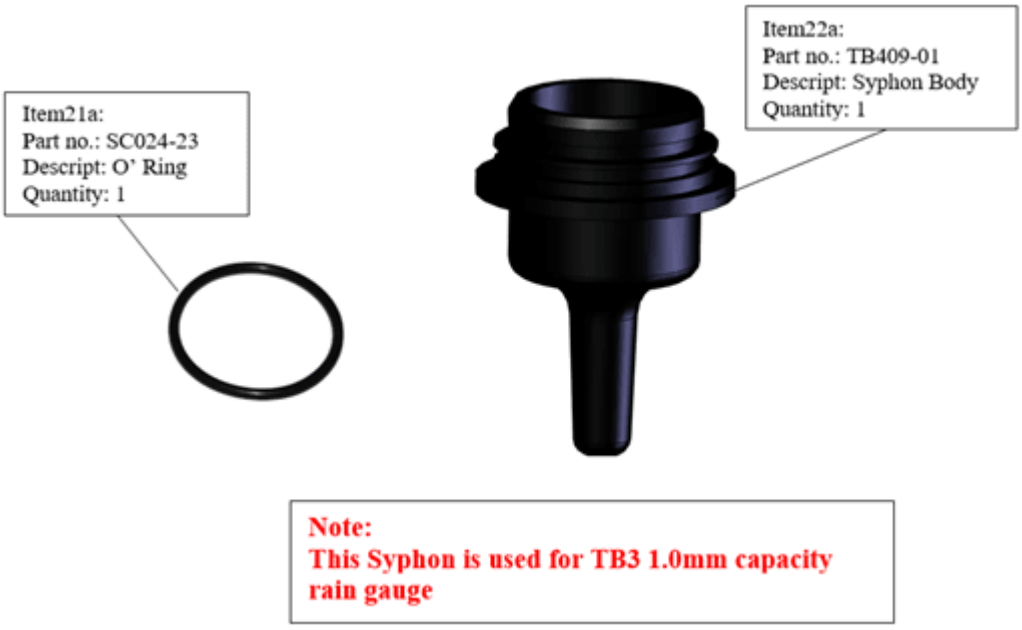


## Filter Part List

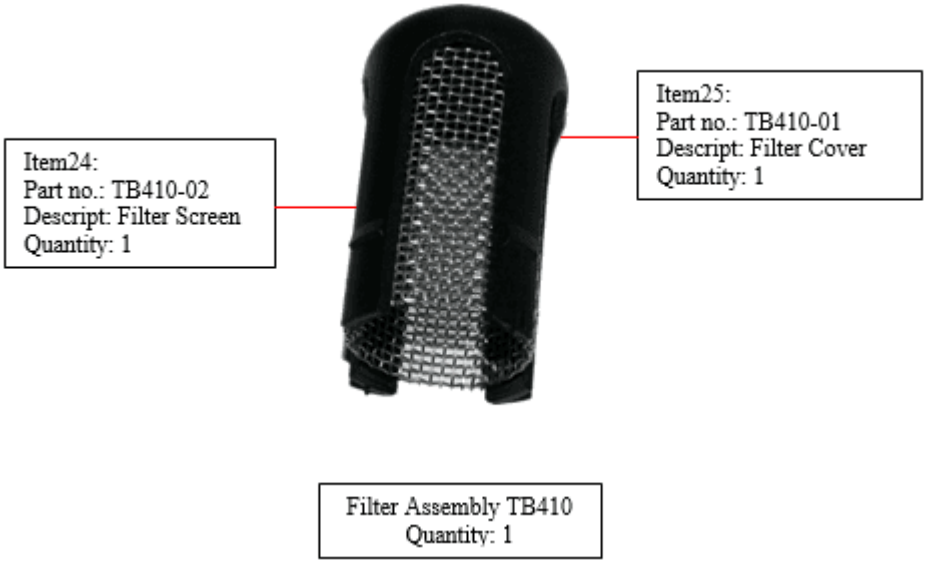

## Enclosure Part List

| Part no. | Description | Quantity |
|---|---|---|
| TB337PC | Funnel assembly | 1 |
| TB418-06 | Louver - injection moulded | 1 |
| TB408-05 | Screen 45 × 28 | 1 |

# 8 Technical Data

| | | | |
|---|---|---|---|
| Resolution | 0.1 mm | 0.2 mm, 0.5 mm, 0.01 inch | 1.0 mm |
| Catch Diameter | 282.84 mm | 200 mm | |
| Bucket | Teflon-impregnated ASA polymer UV-stabilized or brass bucket with paint finish | | Brass bucket with paint finish |
| Syphon Assembly | Delrin body with a brass stem and cap | | Delrin body, straight through brass outlet |
| Pivot/Bucket Mechanism | Machined, robust 316 stainless steel axle resting on corrosion-free sapphire pivots | | |
| Enclosure and Base | Anodized, powder-coated aluminium | | |
| Accuracy | ▪ 0–250 mm per hour: ±2 %<br>▪ 250–500 mm per hour: ±3 % | | |
| Range | 0–700 mm/h (maximum intensity: 700 mm/h) | | |
| Operating Temperature | -20 °C to +70 °C (heater recommended below +4 °C) | | |
| Operating Humidity | 0 to 100 % | | |
| Dimensions and Mass | Ø 282.84 mm × H 410 mm<br>3.8 kg | Ø 200 mm × H 330 mm<br>3.3 kg | |

# 9 Obligations of the Operator and Disposal

This chapter contains the following subsections:


- Obligations of the Operator 24
- Dismantling / Disposal 24


## 9.1 Obligations of the Operator

*European Union*

In the Single European Market it is the responsibility of the operator to ensure that the following legal regulations are observed and complied with: national implementation of the framework directive (89/391/EEC) and the associated individual directives, in particular 2009/104/EC, on minimum safety and health requirements for the use of work equipment by employees at work.

*Worldwide*

Regulations: If and where required, operating licences must be obtained by the operator. In addition, national or regional environmental protection requirements must be complied with, regardless of local legal provisions regarding the following topics:

- Occupational safety
- Product disposal

Connections: Local regulations for electrical installation and connections must be observed.

## 9.2 Dismantling / Disposal

When disposing of the units and their accessories, the applicable local regulations regarding environment, disposal and occupational safety must be observed.

**Before dismantling**

- Electrical Devices:
  - Switch off the units.
  - Disconnect electrical appliances from the power supply, regardless of whether the appliances are connected to the mains or to another power source.
- Mechanical devices:
  - Fix all loose components. Prevent the device from moving independently or unintentionally.
  - Loosen mechanical fastenings: Please note that appliances can be heavy and that loosening the fastenings may cause them to become mechanically unstable.

*Disposal*

Operators of old appliances must recycle them separately from unsorted municipal waste. This applies in particular to electrical waste and old electronic equipment.

Electrical waste and electronic equipment must not be disposed of as household waste!

Instead, these old appliances must be collected separately and disposed of via the local collection and return systems.

Integrated or provided batteries and accumulators must be separated from the appliances and disposed of at the designated

collection point. At the end of its service life, the lithium-ion battery must be disposed of according to legal provisions.

## *EU WEEE Directive*

As players in the environmental market, KISTERS AG is committed to supporting efforts to avoid and recycle waste. Please consider:

- Avoidance before recycling!
- Recycling before disposal!

This symbol indicates that the scrapping of the unit must be carried out in accordance with Directive 2012/19/EU. Please observe the local implementation of the directive and any accompanying or supplementary laws and regulations.

# Contact Data

| | | |
|---|---|---|
| **Europe** | KISTERS Europe | +49 2408 9385 0<br>hydromet.sales@kisters.eu<br>www.kisters.eu |
| **Australia** | KISTERS Australia | +612 9601 2022<br>sales@kisters.com.au<br>www.kisters.com.au |
| **New Zealand** | KISTERS New Zealand | +64 7 857 0810<br>sales@kisters.co.nz<br>www.kisters.co.nz |
| **Latin America** | KISTERS Latin America | +57 350 575 4079<br>sales@kisters-latam.com<br>www.kisters-latam.com |
| **North America** | KISTERS North America | +1 561 459 4876<br>kna@kisters.net<br>www.kisters.net |
| **Spain** | KISTERS Ibérica | info@kisters.es<br>www.kisters.es |
| **France** | KISTERS France | +33 1 4120 9200<br>info@kisters.fr<br>www.kisters.fr |
| **Canada** | KISTERS Canada | kna@kisters.net<br>www.kisters.net |

© 2026 | KISTERS

www.kisters.eu
© 2026 | KISTERS
01/06/2026

KISTERS
Empowering decisions of tomorrow