HydroMet

User Manual

WS250/400/500

KISTERS

Empowering decisions of tomorrow

03-2025 – 01-04-002

Table of Contents

I Disclaimer 3

II Safety Instructions 4

Part I Introduction 5

Part II Installation 6

2.1 Initial Setup ... 6

2.2 Fitting Amergraph Cable to Slipring ... 7

2.3 Fitting C1 Connector to Amergraph Cable ... 11

2.4 Fitting Angle Plug to Amergraph Cable ... 12

2.5 Fitting Tee Plug to Amergraph Cable ... 13

Part III Configuration 15

Part IV Operation 16

4.1 Using the Winch Board ... 16

4.2 Using the A Reel Trolley ... 17

4.3 During Operation ... 17

Part V Maintenance 19

Part VI Troubleshooting 20

6.1 Mechanical ... 20

6.2 Electrical ... 20

Part VII Repair 22

7.1 Part List ... 23

Part VIII Technical Data 35

Part IX Obligations of the Operator and Disposal 36

9.1 Obligations of the Operator ... 36

9.2 Dismantling / Disposal ... 36

Part X Appendices 38

10.1 Break-Away Kit ... 38

10.1.1 Introduction ... 38

10.1.2 Installation ... 39

10.1.3 Operation ... 43

© 2025 | KISTERS

I Disclaimer

The information provided in this manual was deemed accurate as of the publication date. However, updates to this information may have occurred.

This manual does not include all of the details of design, production, or variation of the equipment nor does it cover every possible situation which may arise during installation, operation or maintenance. KISTERS shall not be liable for any incidental, indirect, special or consequential damages whatsoever arising out of or related to this documentation and the information contained in it, even if KISTERS has been advised of the possibility of such damages.

Any errors found in any KISTERS product should be reported to KISTERS where every effort will be made to quickly resolve the problem.

Copyright Notice: No parts of this work may be reproduced in any form or by any means without the written permission of the publisher. KISTERS waives copyright for users to print out parts of the documentation in hard copy for their own use only.

Trademark Notice: KISTERS products and services referred to in this document are trademarks or registered trademarks of KISTERS. Other product names used may or may not be the trademarks of their respective owners.

© 2025 | KISTERS. Any rights not expressly granted herein are reserved.

This document is public.

II Safety Instructions

- Read the user manual including all operating instructions prior to installing, connecting and powering up the KISTERS WS250/400/500. The manual provides information on how to operate the product. The manual is intended to be used by qualified personnel, i.e. personnel that have been adequately trained, are sufficiently familiar with installation, mounting, wiring, powering up and operation of the product.
- Keep the user manual on hand for later reference!
- If you encounter problems understanding the information in the manual (or part thereof), please consult the manufacturer or its appointed reseller for further support.
- KISTERS WS250/400/500 is intended to be used in hydrometeorological or environmental monitoring applications.
- Before starting to work, you have to check the functioning and integrity of the system.
  - Check for visible defects on the WS250/400/500, this may or may not include any or all of the following mounting facilities, connectors and connections, mechanical parts, internal or external communication devices, power supplies or power supply lines, etc.
  - If defects are found that jeopardize the operational safety, work must be stopped. This is true for defects found before starting to work as well as for defects found while working.
- Do not use the KISTERS WS250/400/500 in areas where there is a danger of explosion.
- The present user manual specifies environmental/climatic operating conditions as well as mechanical and electrical conditions. Installation, wiring, powering up and operating the KISTERS WS250/400/500 must strictly comply with these specifications.
- Perform maintenance only when tools or machinery are not in operation.
- If guards are removed to perform maintenance, replace them immediately after servicing.
- Never make any electrical or mechanical diagnostics, inspections or repairs under any circumstances. Return the product to the manufacturer's named repair centre. You can find information on how to return items for repair in the relevant section of the KISTERS website.

Disposal instructions: After taking the KISTERS WS250/400/500 out of service, it must be disposed of in compliance with local waste and environmental regulations. The KISTERS WS250/400/500 is never to be disposed in household waste!

Inputs and outputs of the device are protected against electric discharges and surges (so-called ESD). Do not touch any part of the electronic components! If you need to touch any part, please discharge yourself, i.e. by touching grounded metal parts.

1 Introduction

Thank you for choosing our product. We hope you will enjoy using the device.

KISTERS manufactures, sells, installs and operates quality instrumentation, data loggers and communication technology. Products are designed with passion for environmental monitoring and with a deep understanding of the quality, accuracy and robustness needed to fulfil the requirements of measurement practitioners in the field.

The present User Manual will help you understand, install and deploy the device. If, however, you feel that a particular information is missing, incomplete or confusing, please do not hesitate to contact us for further support!

KISTERS' stream gauging winches are hand-operated single drum winches capable of handling gauging weights using a winch board or bridge crane (up to 70 kg (154 lb) with KISTERS' 4 wheel bridge crane 4WBC). The winches are designed for ease of operation and serviceability in the field: robust, compact, portable, light-weight, and handled easily and safely by one person. They can be deployed from boats or bridges.

The WS250/400/500 is fitted with an automatic "Weston" brake assembly that will hold the load in position once the crank handle is stopped. Hence, to operate the winch and lower the suspended current meter/gauging weight, it is necessary to rotate the handle in a counter-clockwise position.

The WS250/400/500 is normally supplied fitted with armoured cable and a C1 connector ready for operation with a current meter. It may be supplied with the optional stainless steel winch board and outrigger as figure on page 4 of this manual.

2 Installation

This chapter contains the following subsections:

- Initial Setup 6
- Fitting Amergraph Cable to Slipring 7
- Fitting C1 Connector to Amergraph Cable 11
- Fitting Angle Plug to Amergraph Cable 12
- Fitting Tee Plug to Amergraph Cable 13

2.1 Initial Setup

- Remove the winch from the carry case.
- Fit handle, washer and M10 retaining screw onto the shaft of the winch. Use the supplied “Allen Key” to tightly lock the retaining screw.

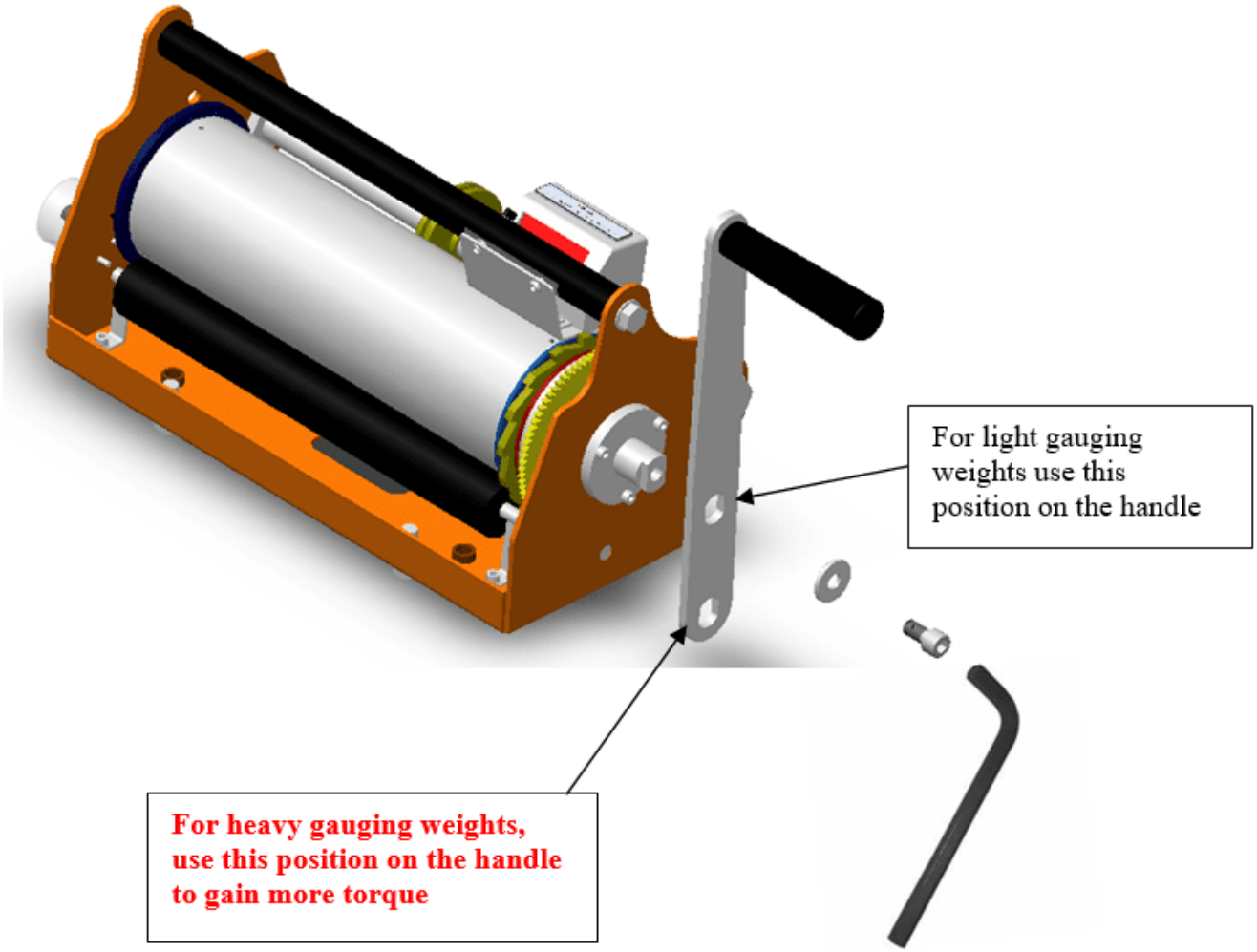

- Fit the winch to the required location such as the winch board or the A Reel trolley using the supplied bolts and washers.
- Wind off sufficient cable to attach gauging weight and current meter.
- Connect pulse counter and check operation by spinning the Fan/cup wheel on the current meter.

2.2 Fitting Amergraph Cable to Slipring

Step 1:

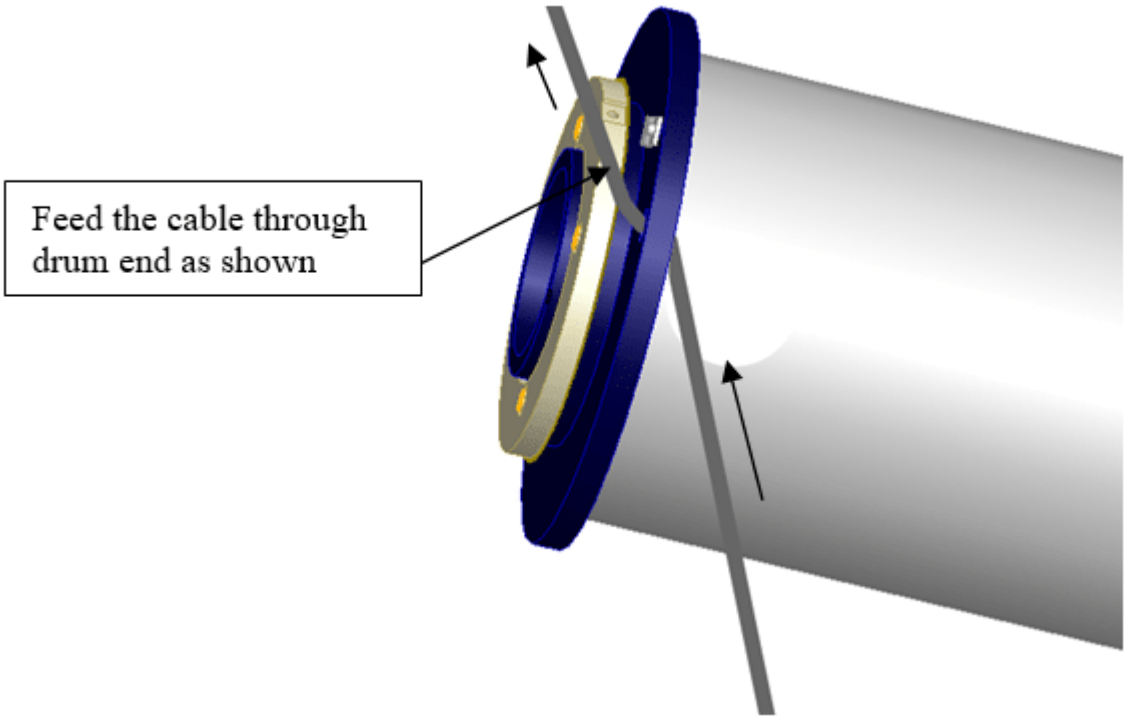

Step 2:

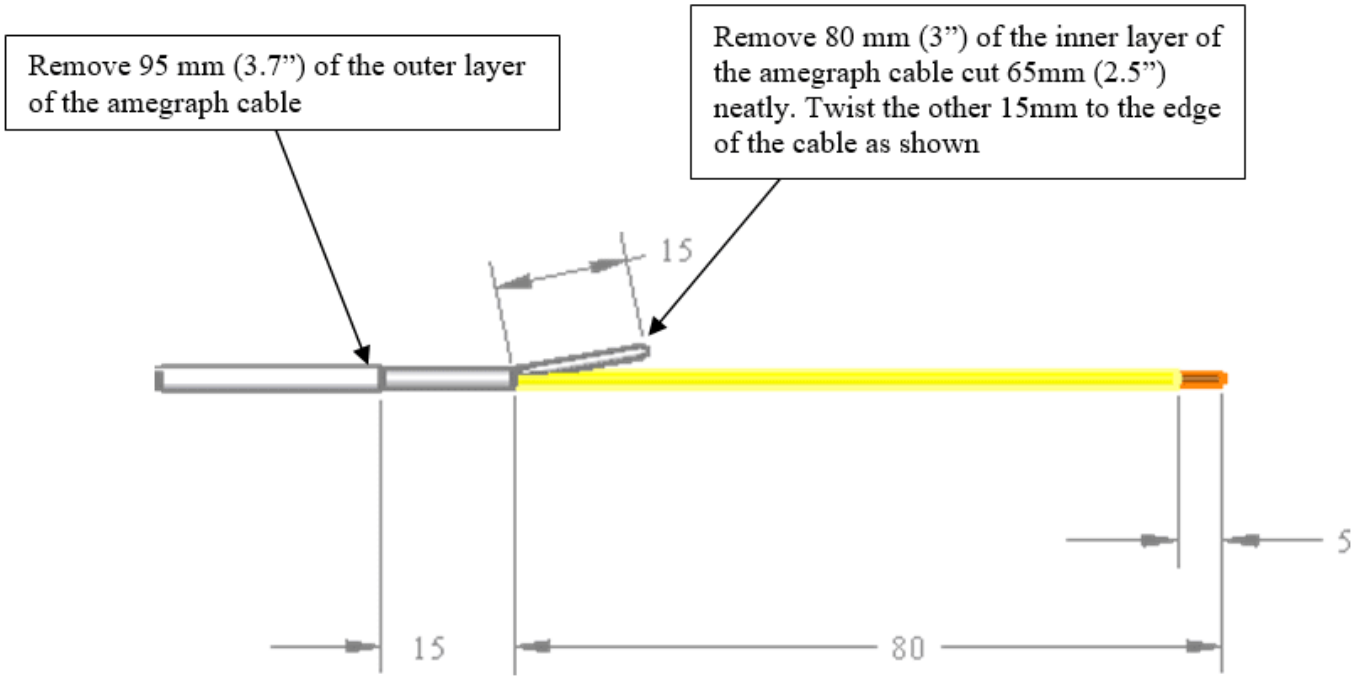

Step 3:

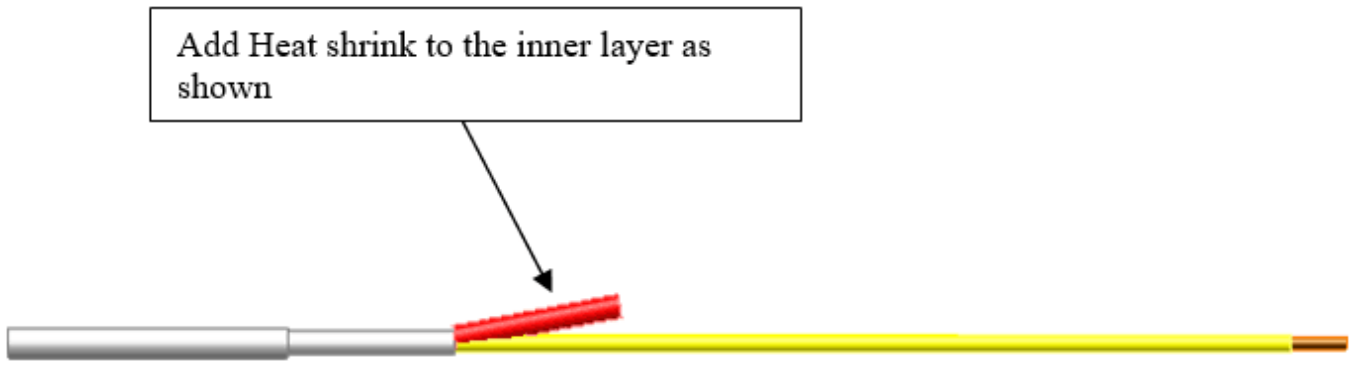
Add Heat shrink to the inner layer as shown

Step 4:

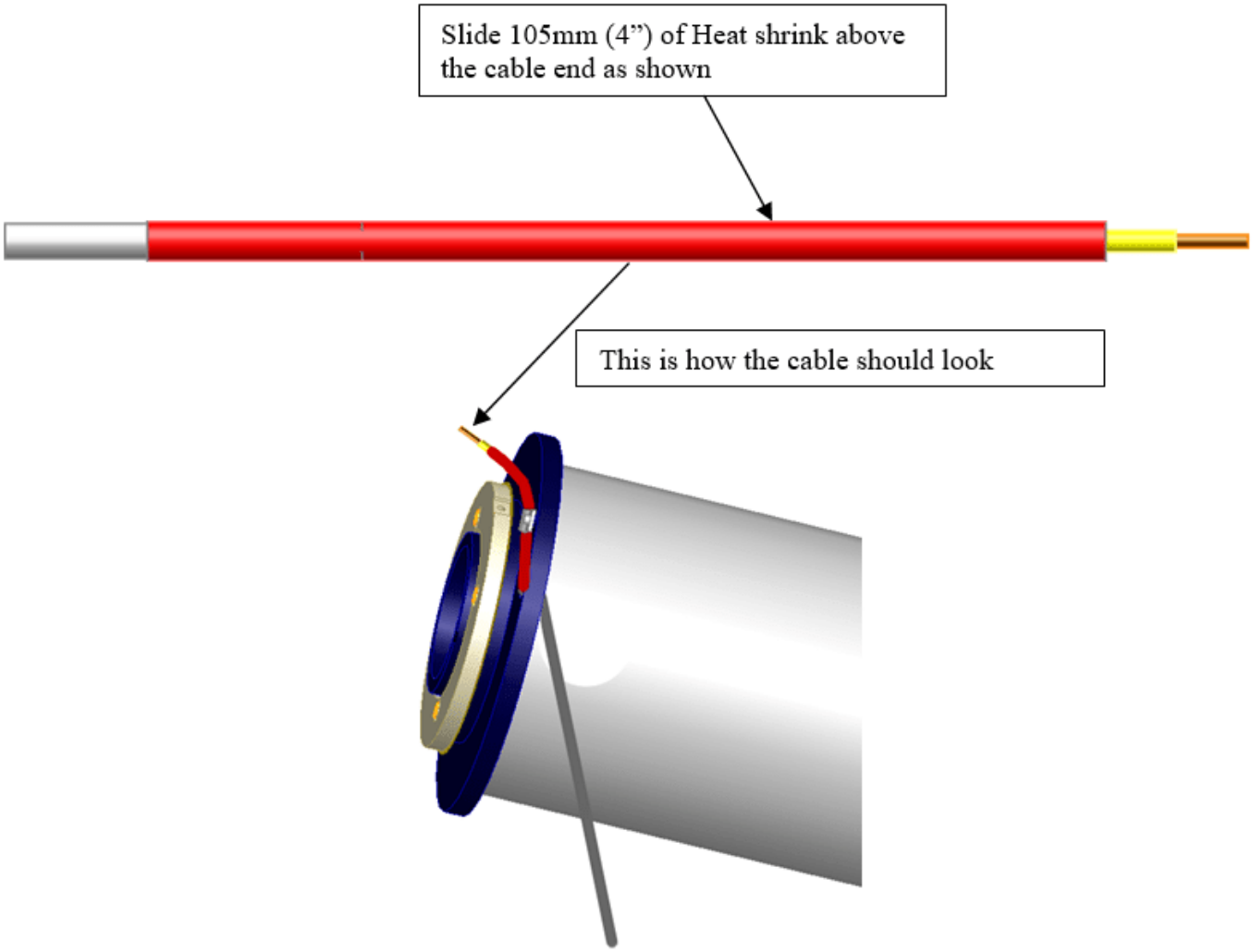
Slide 105mm (4”) of Heat shrink above the cable end as shown
This is how the cable should look

Step 5:

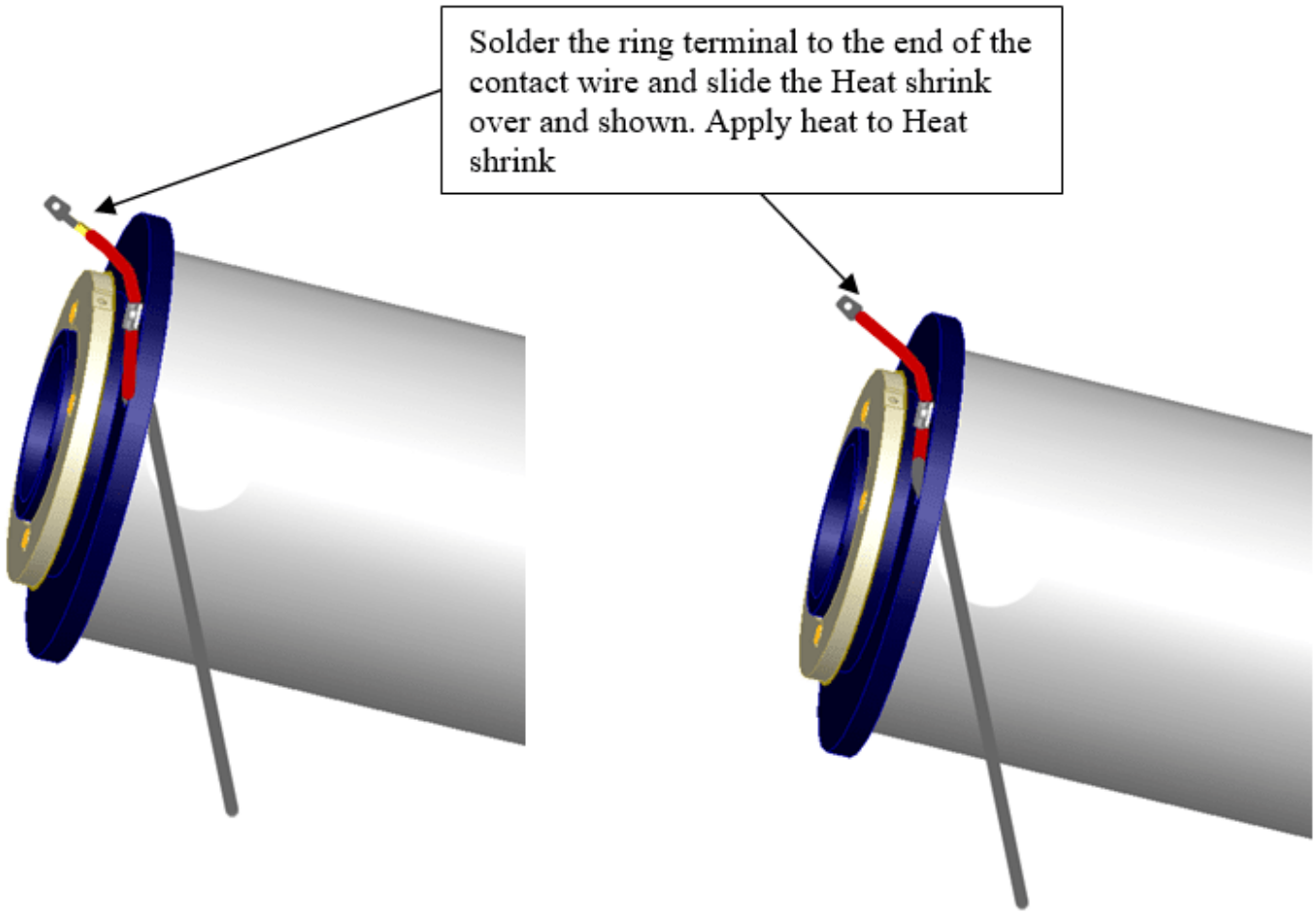
Solder the ring terminal to the end of the contact wire and slide the Heat shrink over and shown. Apply heat to Heat shrink

Step 6:

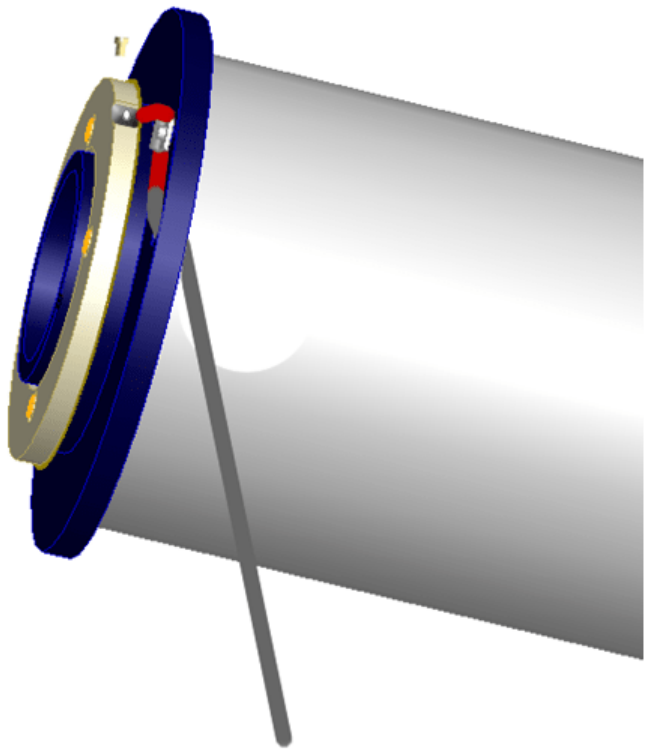

Screw the ring terminal to slipring using the existing screw and tighten the cable clamp and test signal.

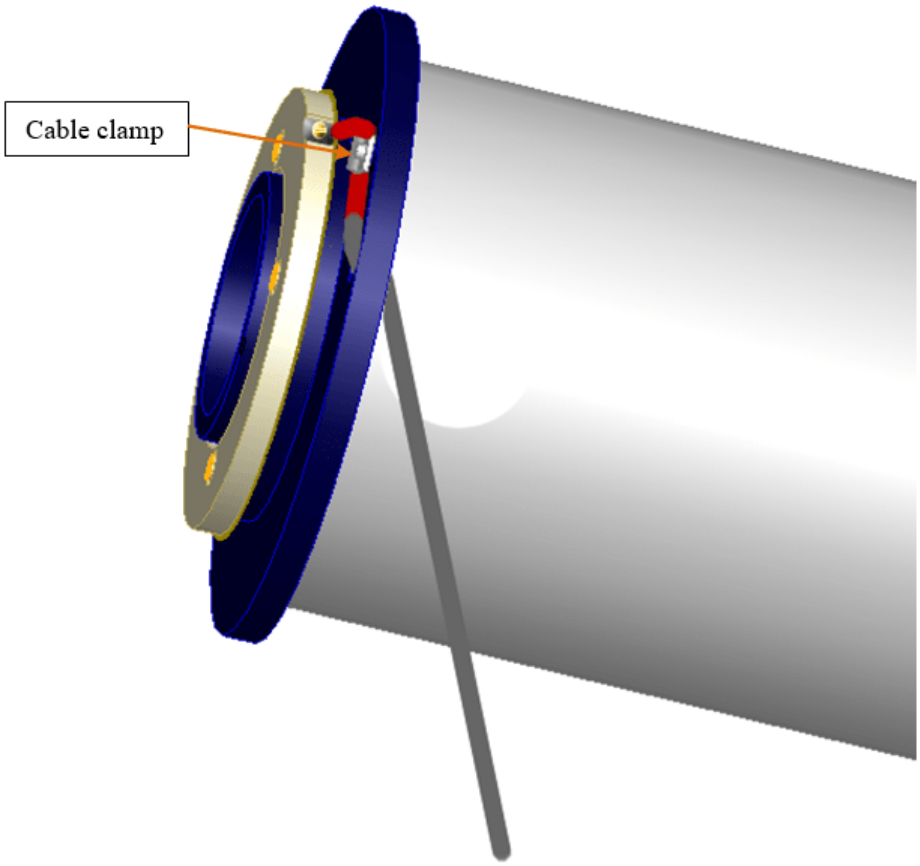

2.3 Fitting C1 Connector to Amergraph Cable

1. With R Clip SC019-01 and Pin C101-03 removed, push the end of the sounding cable through the connector body C101-01.

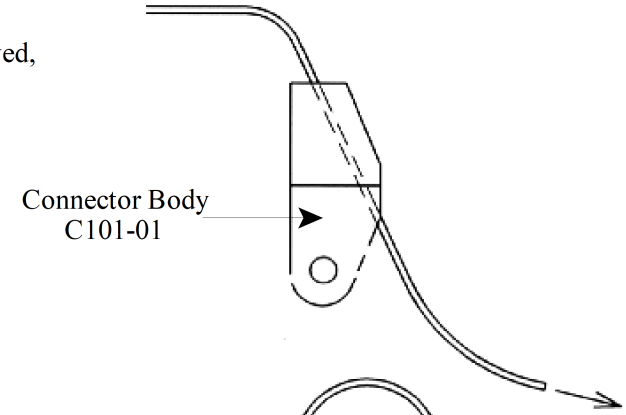

2. Loop the cable and push back through the connector for approximately 400MM.

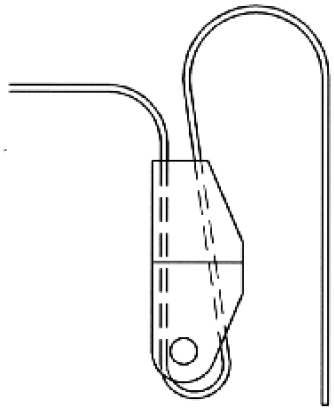

3. Fit Wedge inside cable loop.

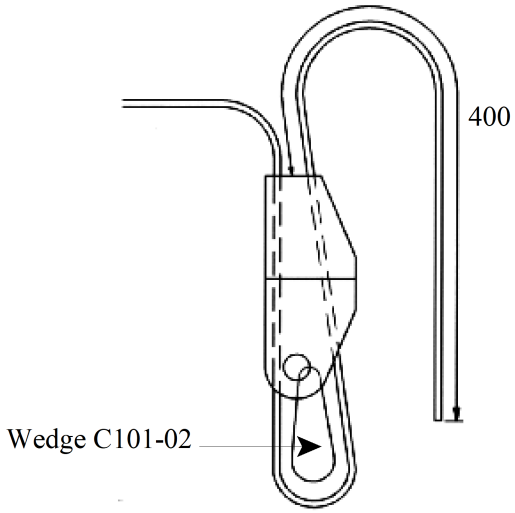

4. Pull cable back until wedge is held and then pull cable again tightly to lock Wedge in position.

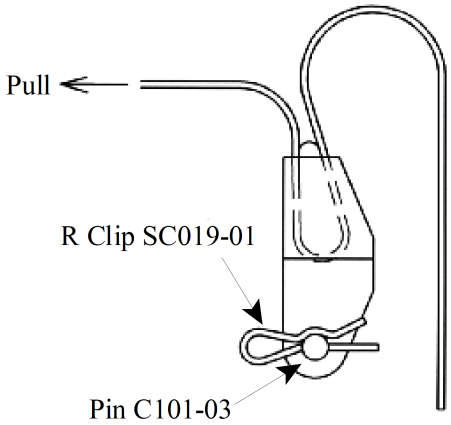

2.4 Fitting Angle Plug to Amergraph Cable

1. Slide nut and flanged bush onto Amergraph cable.
2. Wrap insulating tape around cable 25mm (1") from end, or fit heat shrink, 20mm (3/4") long.
3. Unwind outer layer of cable and cut off at tape.

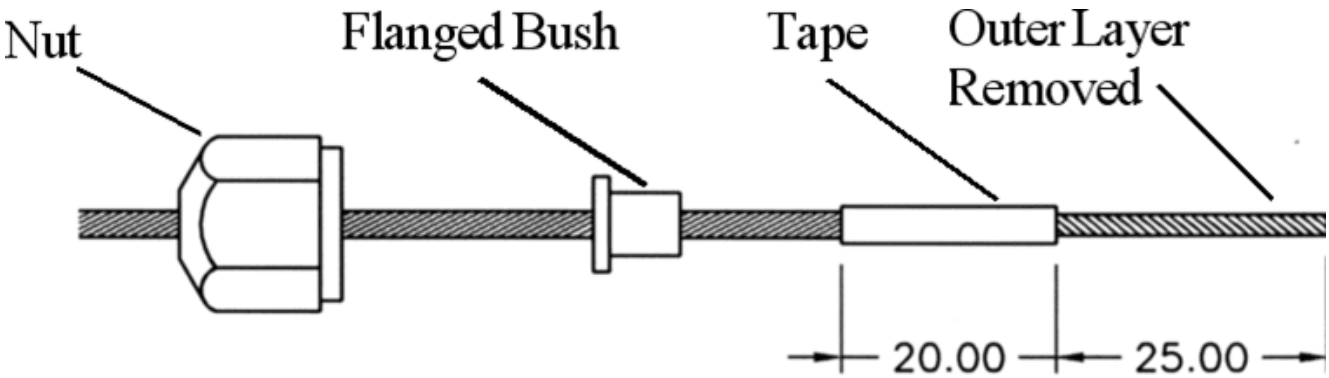

4. Unwind inner cable layer back to tape, one strand at a time and cut off 3mm (1/8") in front of the insulation tape.
5. Slide flanged bush forward and bend the short inner layer strands onto the bush.

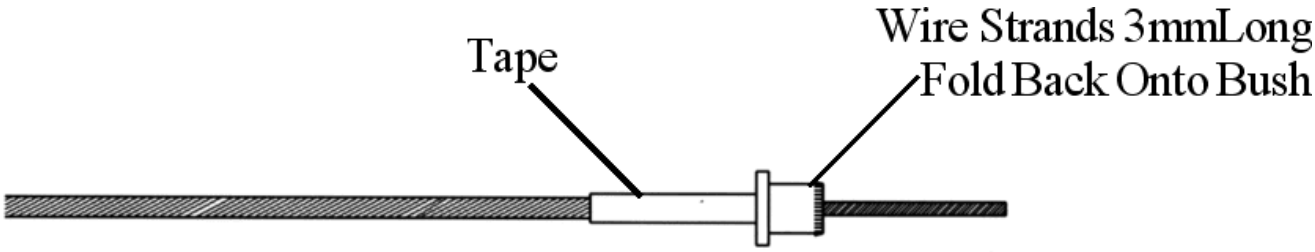

6. Strip conductor insulation back to 8mm (5/16") in front of the flanged bush.
7. Coat copper conductor wire with resin-cored solder. **BE CAREFUL** not to heat wire insulation. Cut wire back to 4mm (5/32") long.

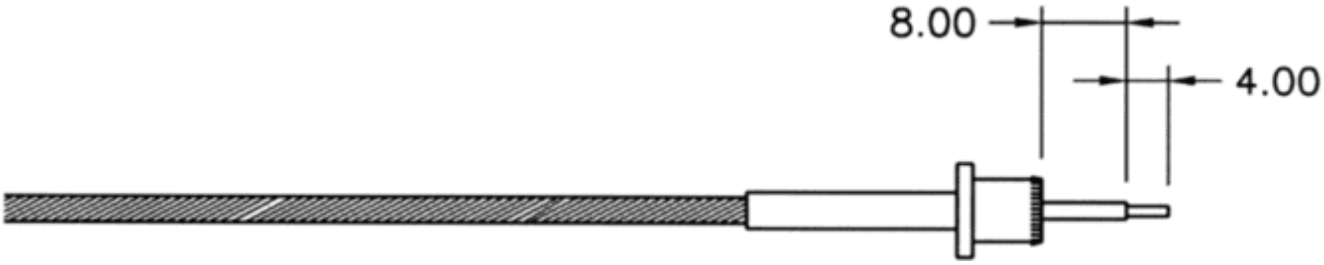

8. Slide rubber seal onto conductor and then push cable into plug. Look into the other end of the plug and check that the conductor wire is in the centre of the plug hole.

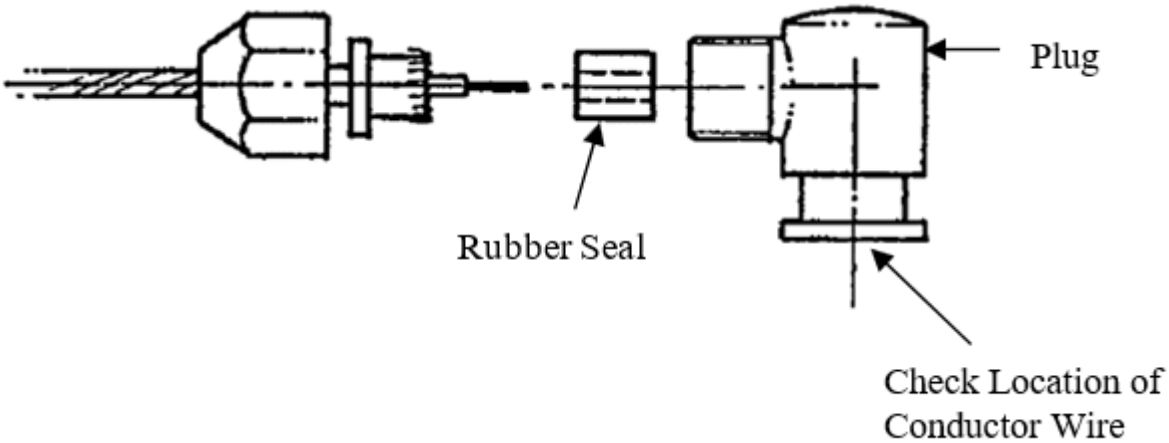

9. Screw nut onto plug and tighten with a spanner.
10. Screw pin into plug and tighten, using a 1/16"Allen key as a lever.
11. Slide rubber insulator onto pin
12. Check circuit.

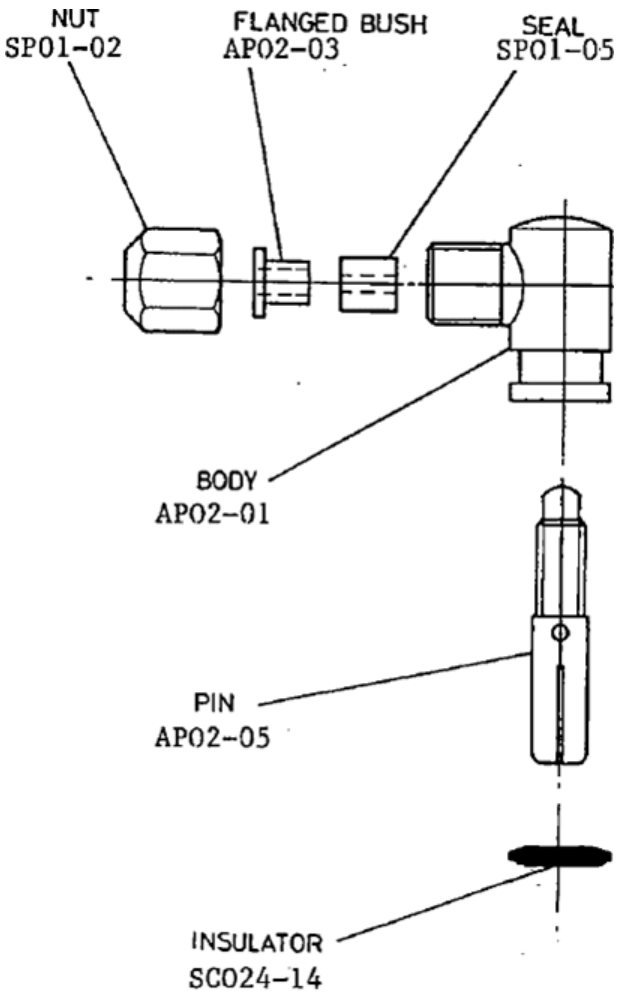

Figure 1 – Angle Plug Assembly AP02

2.5 Fitting Tee Plug to Amergraph Cable

1. Proceed steps 1-9 on both sides of plug.
2. Screw pin into plug and tighten, using 1/16" hexagon wrench as a lever.
3. Slide rubber insulator onto pin.
4. Check circuit.

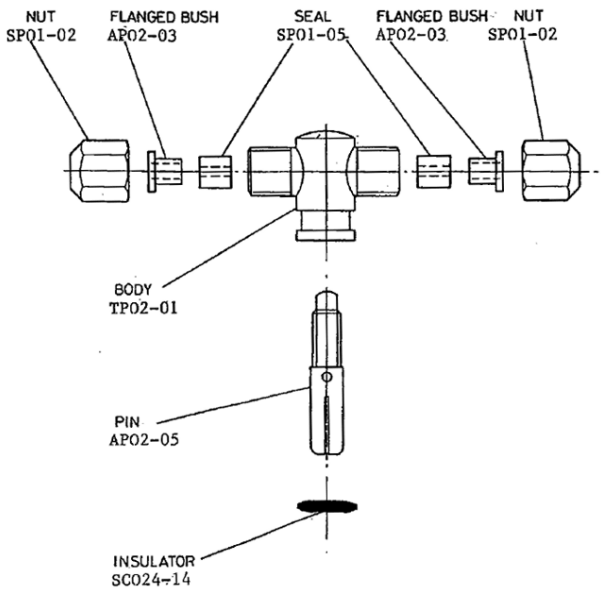

Figure 2 – Angle Plug Assembly TP02

3 Configuration

WS250/400/500 is a purely mechanical device. No specific configuration is required.

Please follow installation instructions 6.

4 Operation

The current meter can be fitted with a stabiliser tail fin which is attached to a hanger bar and Colombus gauging weight in sizes of 7, 15, 23, 34, 45 and 68 kg. This assembly is suspended from the WS250/400/500 gauging winch with armoured signal cable.

KISTERS provides a range of counters to operate with the WS250/400/500 winch. The models available are CMC20A, CMCsp, PVD100 and the HydroMate CMC3.

For more information, see the following subsections:

- Using the Winch Board 16
- Using the A Reel Trolley 17
- During Operation 17

4.1 Using the Winch Board

The WS250/400/500 can be used with KISTERS Winch board model SAN22SS or the A reel trolley.

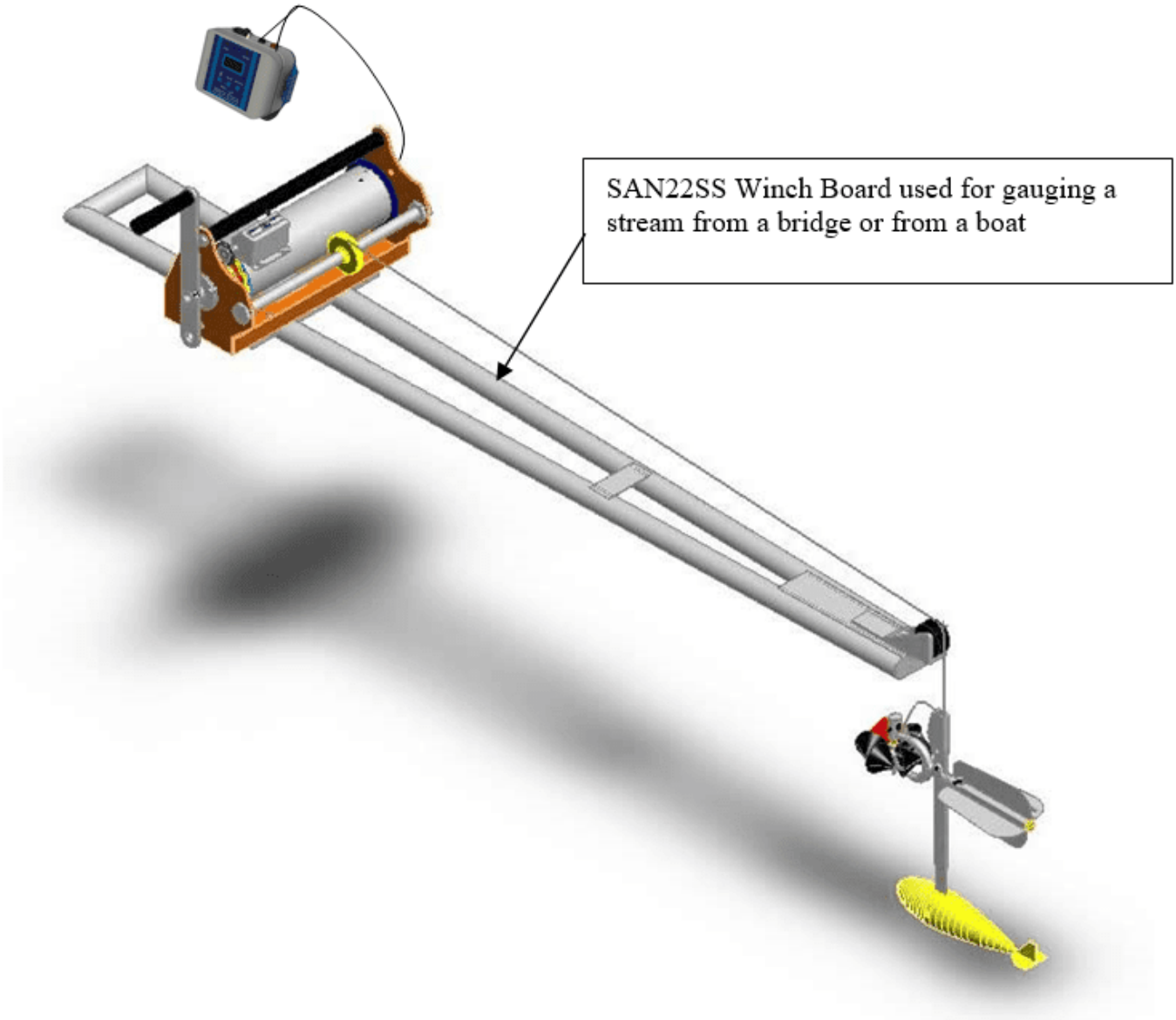

Note: The Winch Board is light weight and is easily handled for performing boat or bridge gauging. The WS250/400/500 is mounted to the winch board using the 4 mounting holes on the bottom of the frame and the 4 bolts supplied with the winch.

4.2 Using the A Reel Trolley

Note: The WS250/400/500 is mounted to the A Reel Trolley using the 4 mounting holes on the bottom of the frame and the 4 bolts supplied with the winch.

4.3 During Operation

- Rotate the handle in a counter-clockwise direction until the "underside" of the gauging weight touches the surface of the water.
- At this instance, you need to reset the mechanical counter on the winch. Please note do not reset the counter while rotating as it may cause the number reels to momentarily jam. If this happens, stop rotating the handle and then press the reset button again.

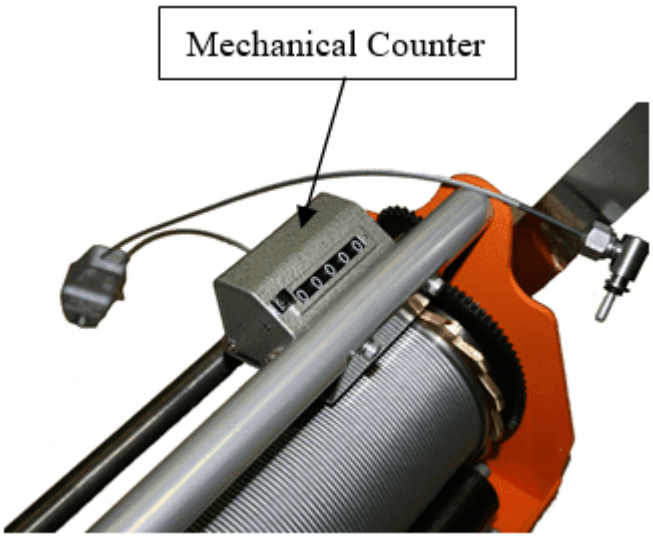

- Lower the current meter and weight to 0.2 m, 0.6 m or 0.8 m of the water level and measure your flow.

5 Maintenance

The only maintenance required is to lightly oil or grease the Layer winding screw periodically. This usually is required if the lead screw appears to be “dry” or if the sheave is emitting “squealing” noise when rotating.

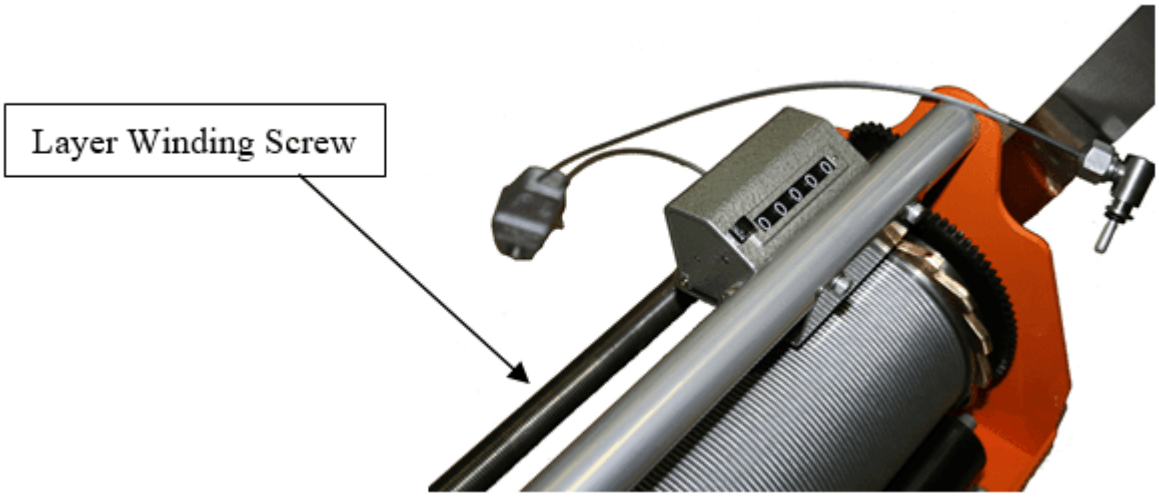

6 Troubleshooting

This chapter contains the following subsections:

- Mechanical 20
- Electrical 20

6.1 Mechanical

Fault Symptom	Possible Cause	Action
Counter not registering	▪ Counter was reset while rotating handle.	▪ Reset counter in a stop position.
	▪ Counter gear loose on shaft.	▪ Tighten Grub Screw.
Weston brake will not disengage	▪ Seizure due to prolonged period without use.	▪ Attach heavy load to cable and pull or hit the handle sharply in the lower direction (Anti-Clockwise). Repeat several time and if unsuccessful; remove brake assembly for inspection.
Weston brake slips in “raise” mode	▪ Ratchet wheel, friction disc and drum end surfaces not “bedded-in”.	▪ Attach light load to cable and wind up and down several times with Weston brake engaged. If no improvement, dismantle and check for grease on friction surfaces.
Layer winding sheave not freely running, emitting “squealing” noise or lead screw dry	▪ Shaft dirty.	▪ Remove from winch and clean sheave and shaft separately. Lightly oil or grease after re-installing.
	▪ Thread damaged.	▪ Repair damaged thread with file. Lightly oil or grease after re-installing.
	▪ Thread Dry.	▪ Lightly oil or grease.

6.2 Electrical

Fault Symptom	Possible Cause	Action
Current meter counter not registering	▪ Counter faulty.	▪ Bridge positive and negative terminals on counter. If no signal, repair counter.
	▪ Lead damaged.	▪ Connect lead to counter and bridge other end. If no signal, lead faulty. Replace or repair ends.
	▪ Earth (Black) terminal is faulty.	▪ With lead connected to winch, bridge red terminal to frame. If no signal terminal loose or corroded.
	▪ Damaged brush or terminal wire.	▪ Bridge slip ring to winch frame. If signal emits that means proper circuit between brush and red terminal. If no signal, loose red terminal connection, broken, or brush sticking. To check condition of brush remove signal adaptor by unscrewing the black terminal and the mounting screw. Ensure that brush and spring move freely in signal adaptor housing or repair with file and extend the spring.

Fault Symptom	Possible Cause	Action
	▪ Wiring to slip ring break.	▪ Check the wire on the slip ring if loose or broken. If broken see section fitting amegraph cable to slip ring.
Current meter counter registering continuously	▪ Faulty lead.	▪ Fit lead to counter only. Signal shows internal short circuit in lead. Inspect for break or damage.
	▪ Current meter or angle plug are faulty.	▪ Disconnect meter. If signal still emitting continuously. Check the earth inside angle plug or damage to cable between meter and gauging weight. If signal stops emitting continuously repair the current meter.
	▪ Meter suspension cable is damaged, or slip ring wires earthing to drum end.	▪ With lead connected to winch, bridge red terminal to frame. If no signal terminal loose or corroded.

7 Repair

KISTERS precision instruments and data loggers are produced in quality-controlled processes. All KISTERS production and assembly sites in Australia, New Zealand and Europe are ISO 90001 certified. All equipment is factory tested and/or factory calibrated before it is shipped to the client. This ensures that KISTERS products perform to their fullest capacity when delivered.

Despite KISTERS most rigorous quality assurance (QA), malfunction may occur within or outside of the warranty period. In rare cases, a product may not be delivered in accordance with your order.

In such cases KISTERS' return and repair policy applies. For you as a customer, this means the following:

- Contact KISTERS using the Repair Request Form and the Declaration of Contamination made available online:

Region (Language)	Download Link
Asia–Pacific (English)	Repair Request Form (APAC) Declaration of Contamination (APAC)
Europe, the Middle East and Africa (English)	Repair Request Form (EMEA) Declaration of Contamination (EMEA)
Germany (German)	Repair Request Form (DE) Declaration of Contamination (DE)

  In response you will receive a reference number that must be referenced on all further correspondence and on the freight documents accompanying your return shipment.
- Please provide as much information and/or clear instructions within the return paperwork. This will assist our test engineers with their diagnosis.
- Please do not ship the goods prior to obtaining the reference number. KISTERS will not reject any equipment that arrives without reference number; however, it may take us longer to process.

Custom requirements for items sent to KISTERS for warranty or non-warranty repairs: Check with your national customs/tax authorities for details, processes and paperwork regarding tax exempt return of products. Typically, special custom tariff codes are available (such as HS Code = 9802.00) that verify the item is being returned for repair and has no commercial value. Please note that the customs invoice / dispatch documents should also clearly state: "Goods being returned to manufacturer for repair – No Commercial value". It is mandatory to have any returned goods accompanied by a commercial invoice on headed paper. KISTERS reserves the right to charge the customer for time spent rectifying incorrect customs documents.

Note: Please ensure that your goods are packed carefully and securely. Damage that occurs during transit is not covered by our warranty and may be chargeable.

For more information, see the following subsection:

- Part List 23

7.1 Part List

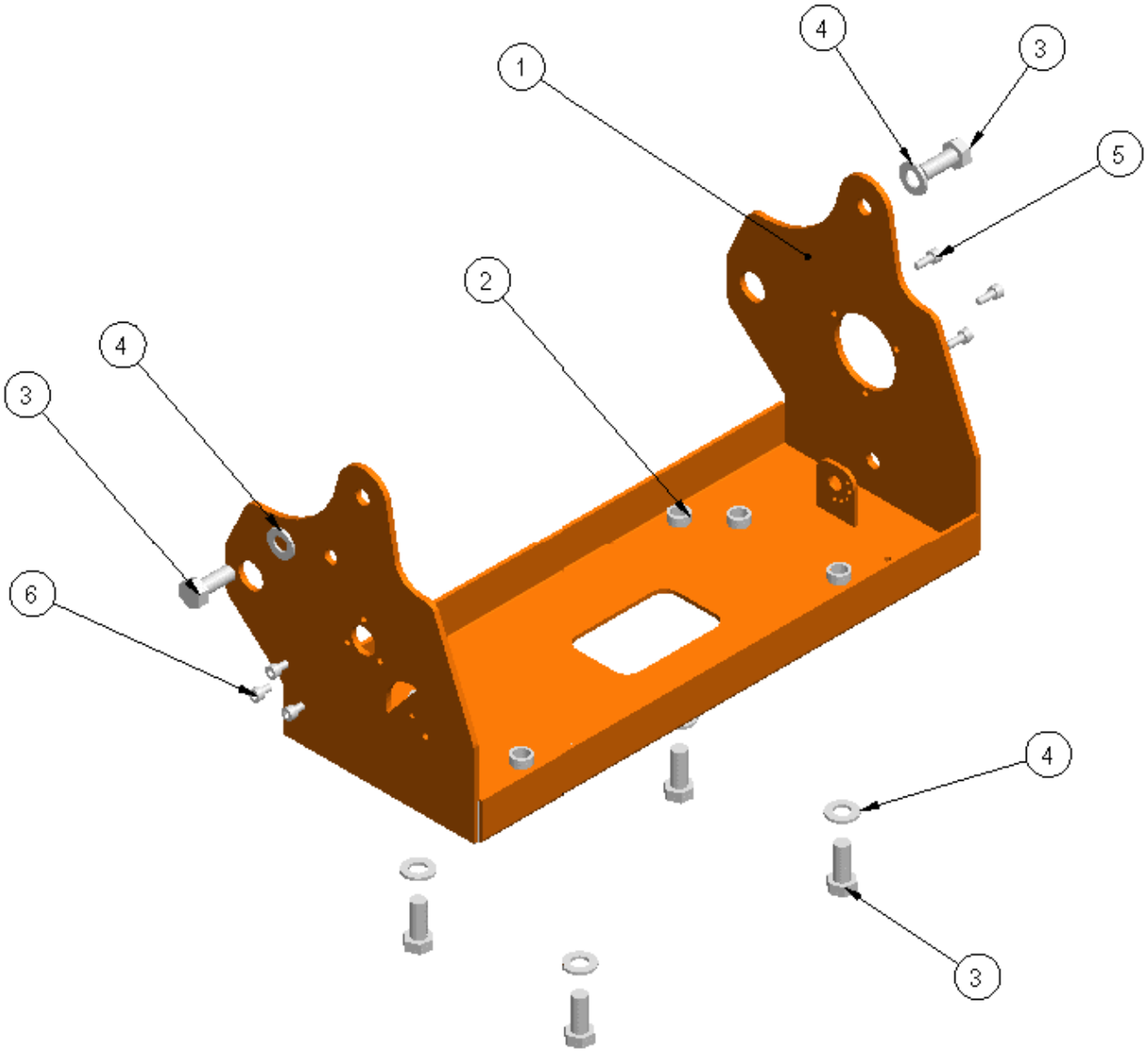

ITEM NO.	PART NUMBER	DESCRIPTION	QTY.
1	WS401	FRAME	1
2	SC008-78	M10 NUTSERT	8
3	SC017-35	M10 HEX BOLT	6
4	SC004-34	M10 FLAT WASHER	6
5	SC045-21	M5x12 SOC HD SCREW	3
6	SC045-88	M5x8 SOC HD SCREW	3

Figure 3 – Frame Assembly

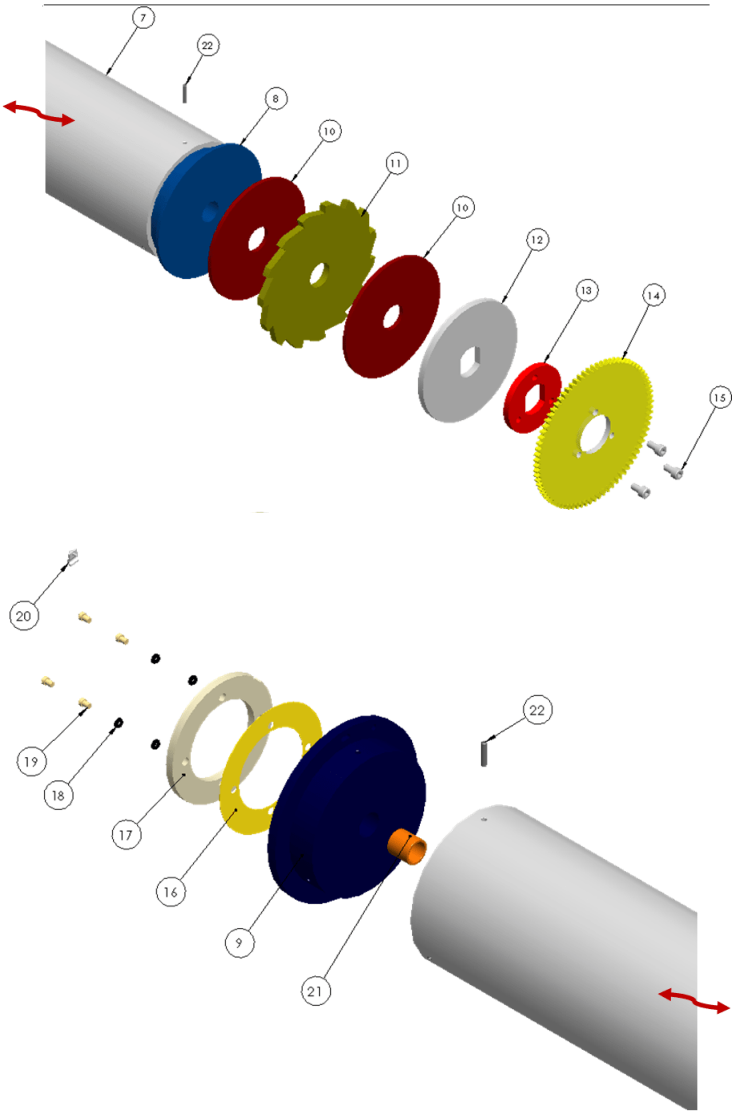

ITEM NO.	PART NUMBER	DESCRIPTION	QTY.
7	WS402-01	DRUM	1
8	WS402-02	DRUM END RHS	1
9	WS402-03	DRUM END LHS	1
10	WS402-04	BRAKE PAD	2
11	WS402-05	RATCHET	1
12	WS402-06	BRAKE SPACER	1
13	WS402-07	GEAR SPACER	1
14	WS402-08	DRUM GEAR	1
15	SC045-88	M5 x 8 SOC HD SCREW	3
16	LAT10-02	MYLAR DISK	1
17	LAT10-03	SLIP RING	1
18	LAT10-04	INSULATING BUSH	4
19	SC016-02	1/8W x 1/4" CHEESE HD SLOT SCREW	4
20	SC006-166	CABLE CLAMP	1
21	SC048-30	BUSH	1
22	SC042-08	1/8" ROLL PIN	6

Figure 4 – Drum Assembly

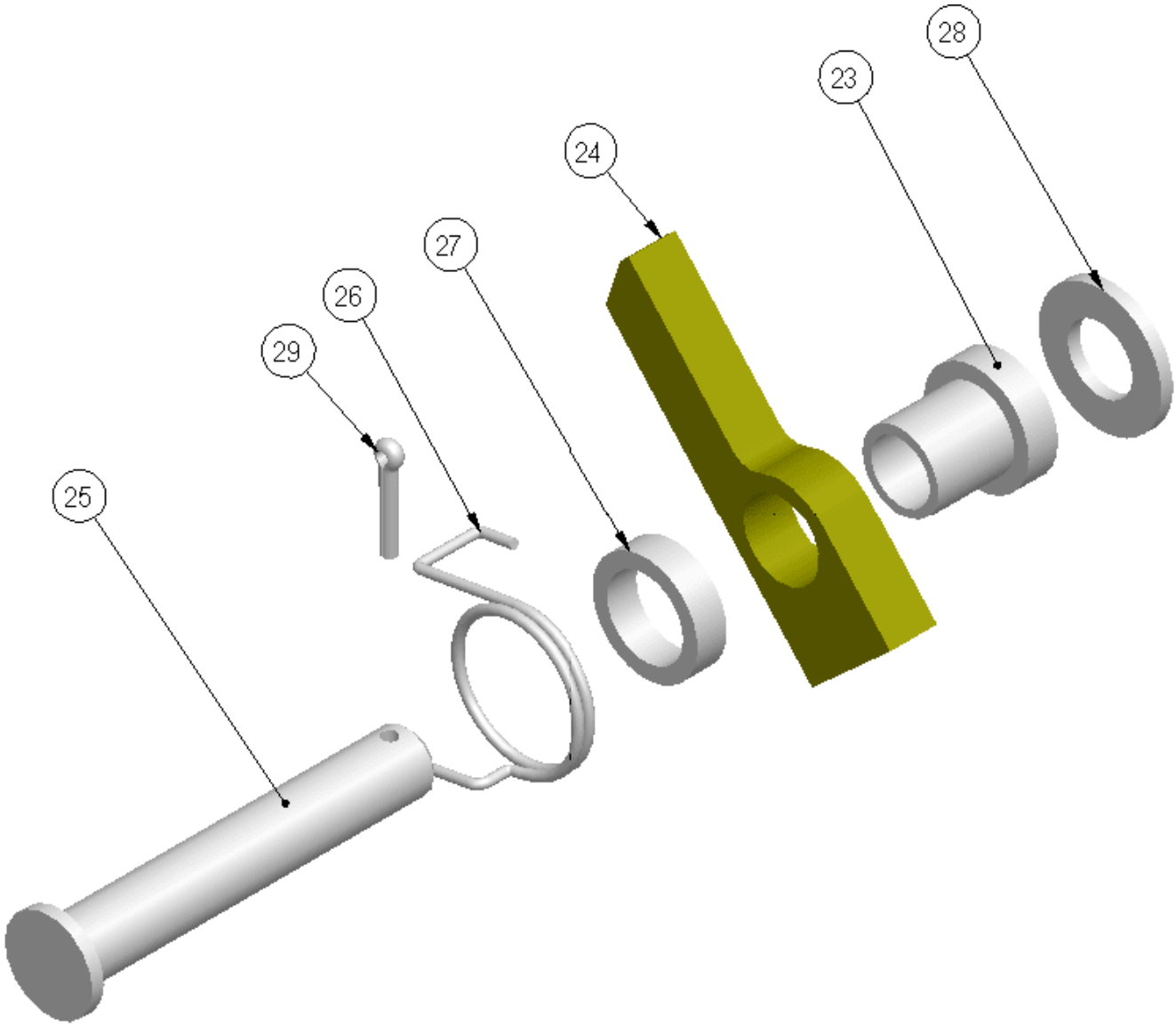

ITEM NO.	PART NUMBER	DESCRIPTION	QTY.
23	WS403-03	PAWL BUSH	1
24	WS403-02	PAWL	1
25	WS403-01	PAWL SHAFT	1
26	WS403-05	PAWL SPRING	1
27	WS403-04	PAWL RETAINER RING	1
28	SC004-34	M10 FLAT WASHER	1
29	SC050-06	M2.5 SPLIT PIN	1

Figure 5 – Pawl Assembly

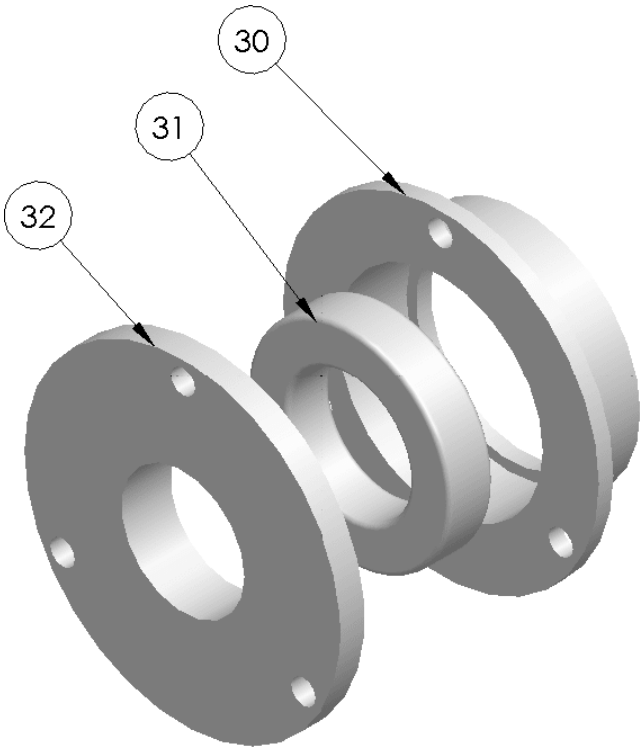

ITEM NO.	PART NUMBER	DESCRIPTION	QTY.
30	WS404-01	BEARING HOUSING	1
31	SC058-36	BEARING 25ID x 42OD x 9W	1
32	WS404-02	BEARING RETAINER	1

Figure 6 – RHS Bearing Assembly

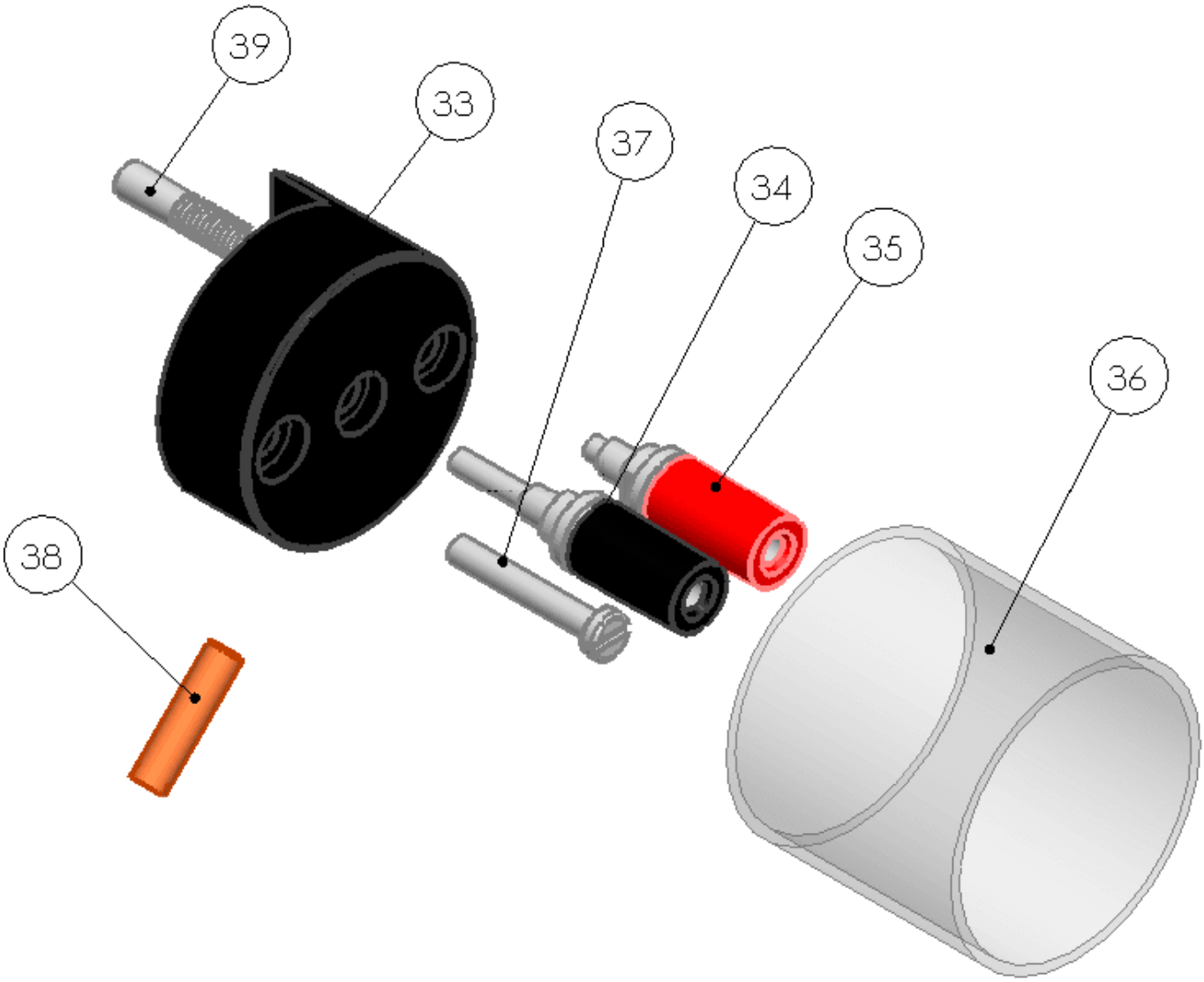

ITEM NO.	PART NUMBER	DESCRIPTION	QTY.
33	WS405-01	SIGNAL ADAPTOR HOUSING	1
34	SC044-18	BANANA PLUG - BLACK	1
35	SC044-17	BANANA PLUG - RED	1
36	WS405-02	SIGNAL ADAPTOR PROTECTOR	1
37	SC016-22	M4x25L CHEESE HD SCREW SLOT	1
38	SC039-20	M5x20L GRUB SCREW	1
39	SC077-01	CONTACT BRUSH	1

Figure 7 – Signal Adaptor Assembly

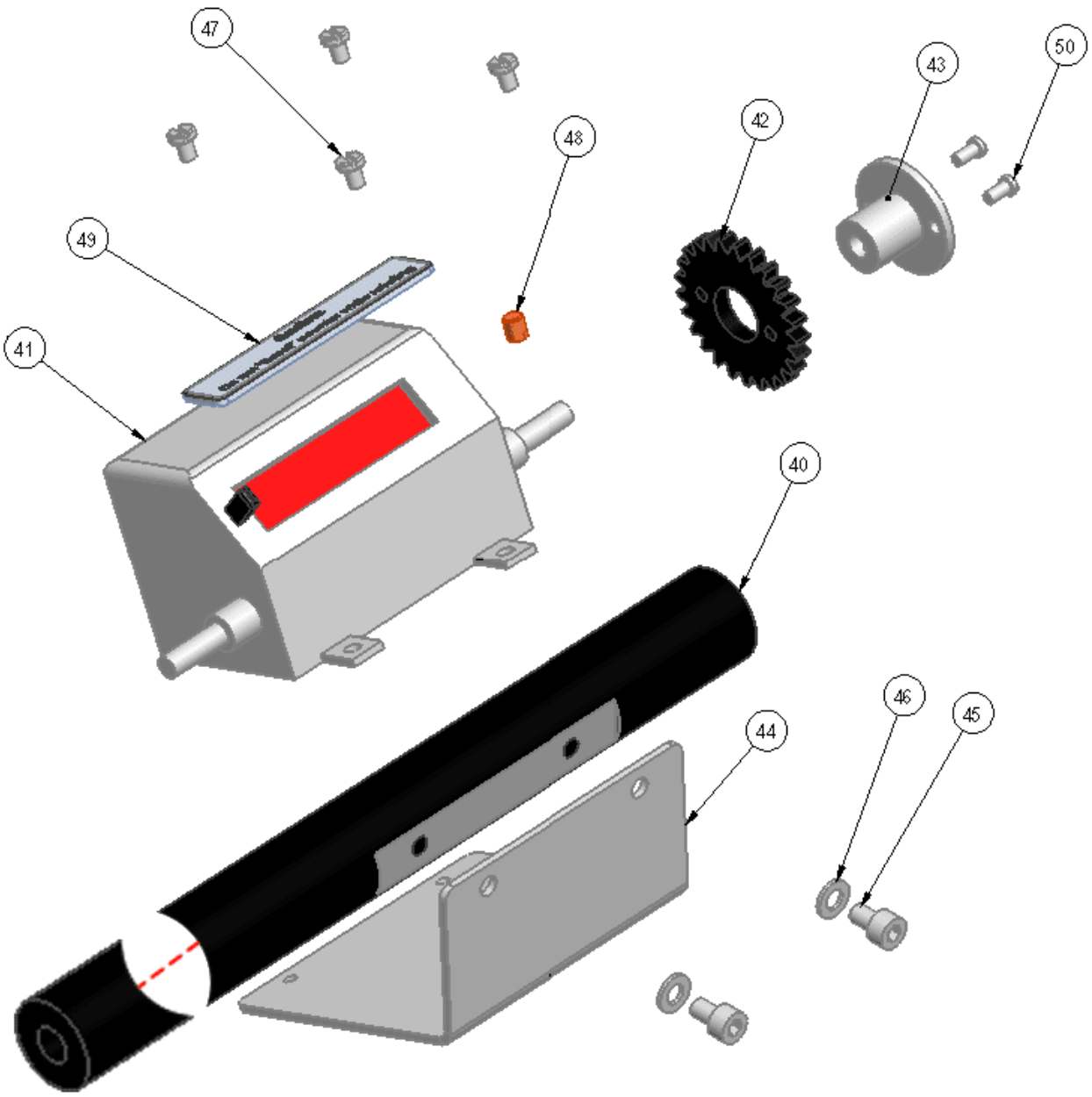

ITEM NO.	PART NUMBER	DESCRIPTION	QTY.
40	WS406-01	WINCH CARRY HANDLE	1
41	SC047-27	DEPTH COUNTER	1
42	WS406-03	COUNTER GEAR	1
43	WS406-04	COUNTER GEAR HUB	1
44	WS406-02	COUNTER BRACKET	1
45	SC045-88	M5x8 SOC HD SCREW	2
46	SC004-14	M5 FLAT WASHER	2
47	SC016-15	M4x8L CHEESE HD SCREW SLOT	4
48	SC039-07	M5x 6L GRUB SCREW	1
49	WS406-05	COUNTER LABEL	1
50	SC022-03	6-32UNC PAN HD SCREW	2

Figure 8 – Depth Counter Assembly

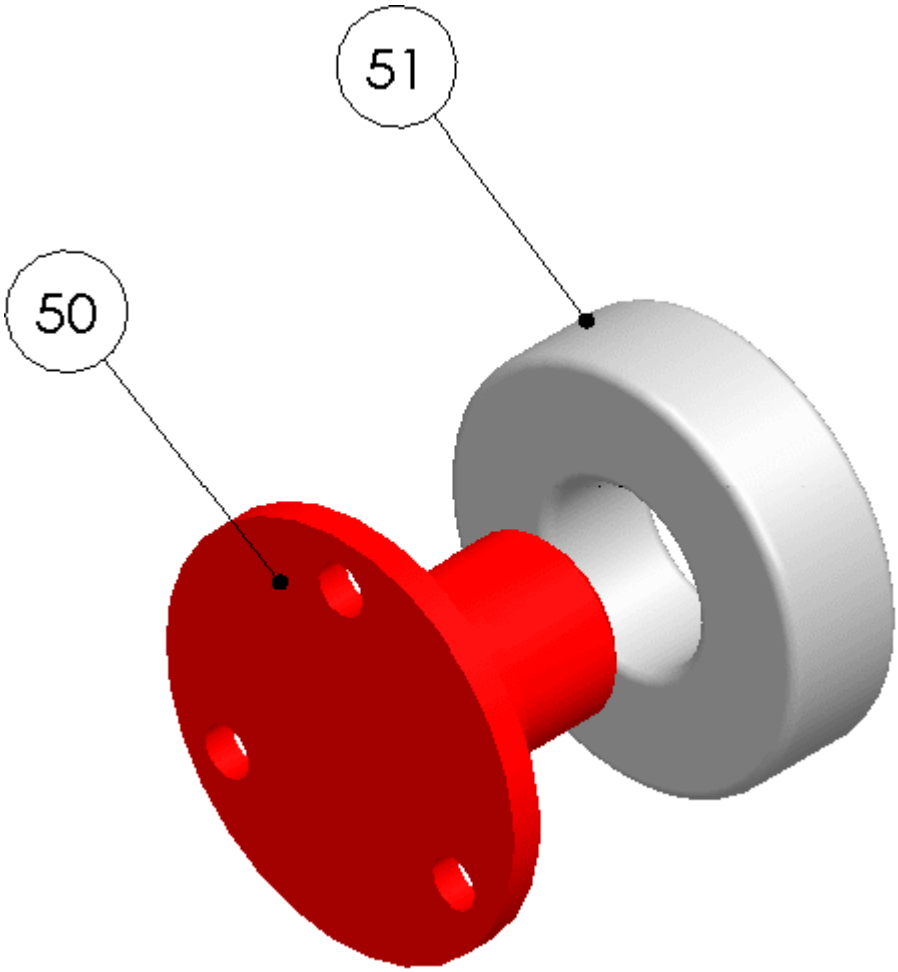

ITEM NO.	PART NUMBER	DESCRIPTION	QTY.
50	WS407-01	BEARING SHAFT RETAINER	1
51	SC058-35	BEARING 17ID x 40OD x 12W	1

Figure 9 – LHS Bearing Assembly

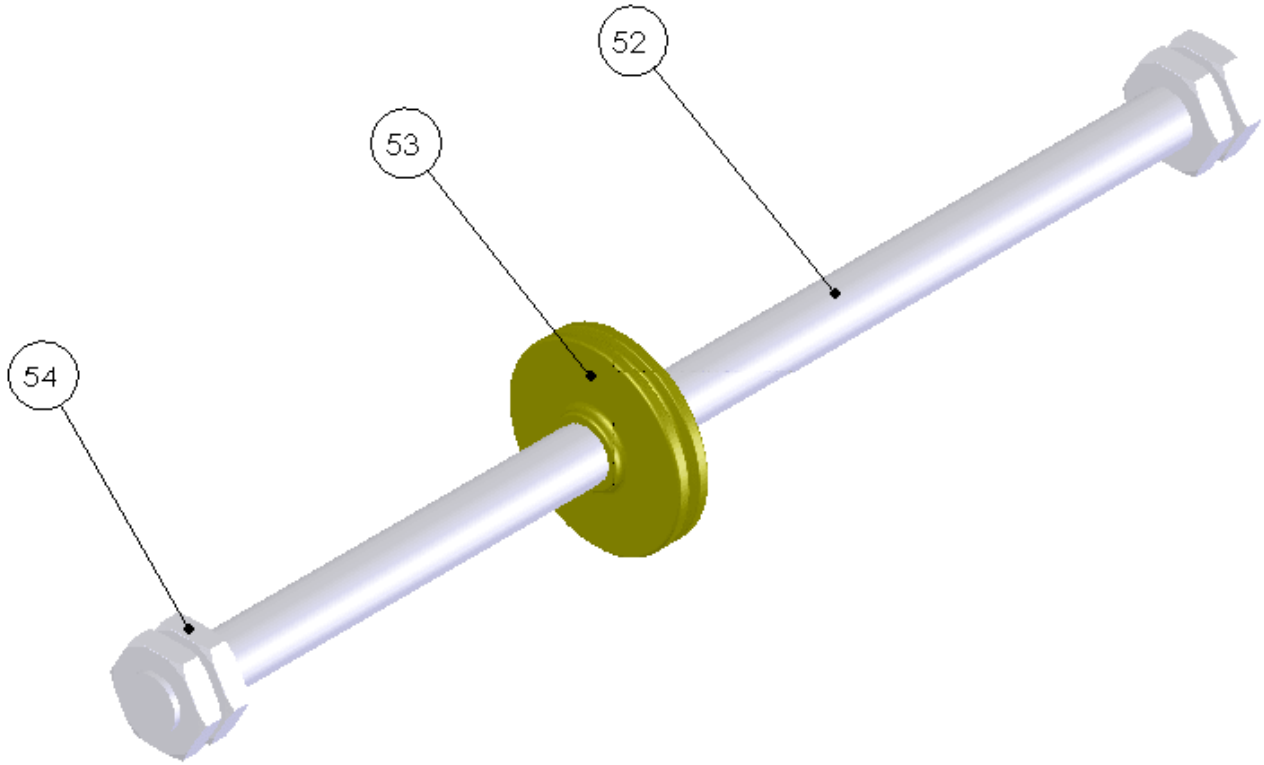

ITEM NO.	PART NUMBER	DESCRIPTION	QTY.
52	WS408-01	LAYER WINDING SCREW	1
53	WS408-02	1/8" CABLE SHEAVE	1
54	HOR18-03	LAYER WINDING NUT	4

Figure 10 – Layer Winding Assembly

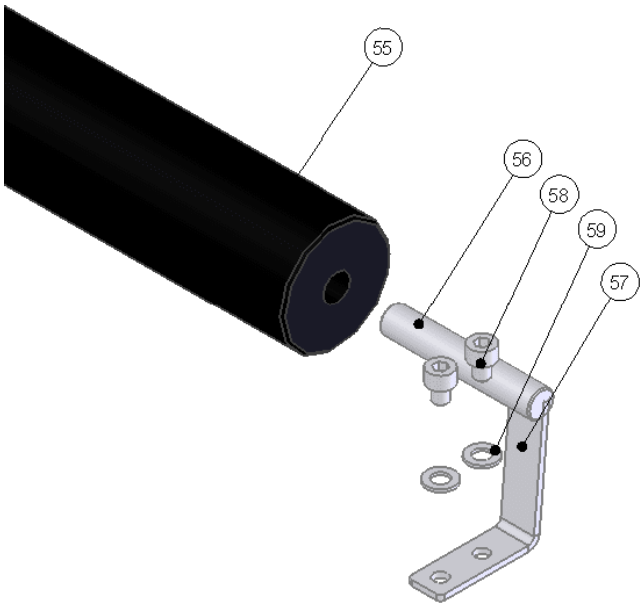

ITEM NO.	PART NUMBER	DESCRIPTION	QTY.
55	WS409-02	PRESSURE ROLLER	1
56	WS409-01-A	PRESSURE ROLLER PIN	2
57	WS409-01-B	PREESURE ROLLER BRACKET	2
58	SC045-89	M5x6 SOC HD SCREW	4
59	SC004-14	M5 FLAT WASHER	4

Figure 11 – Pressure Roller Assembly

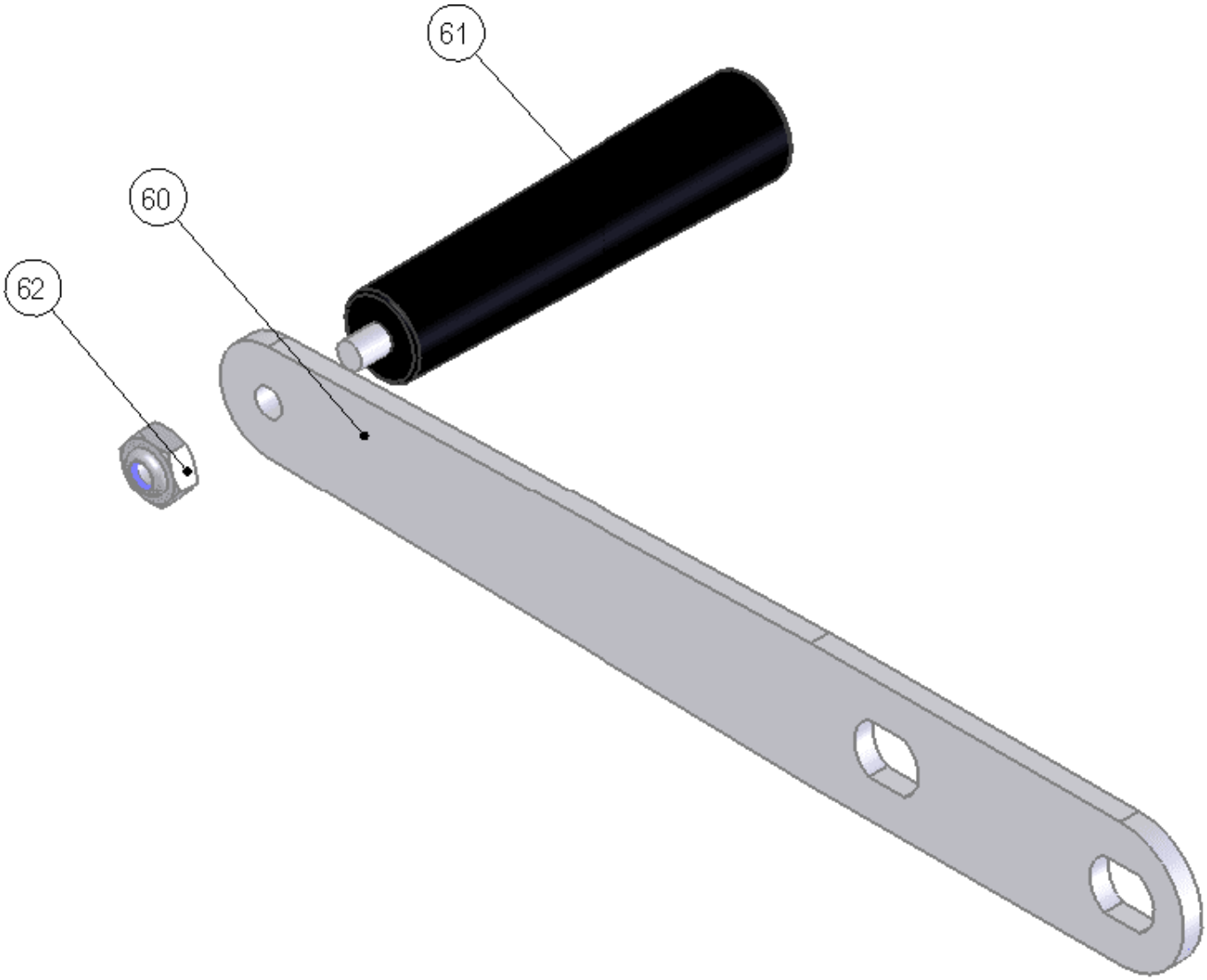

ITEM NO.	PART NUMBER	DESCRIPTION	QTY.
60	WS410-01	WINCH HANDLE	1
61	SC040-53	HANDLE GRIP	1
62	SC008-69	M10 NYLOCK NUT	1

Figure 12 – Handle Assembly

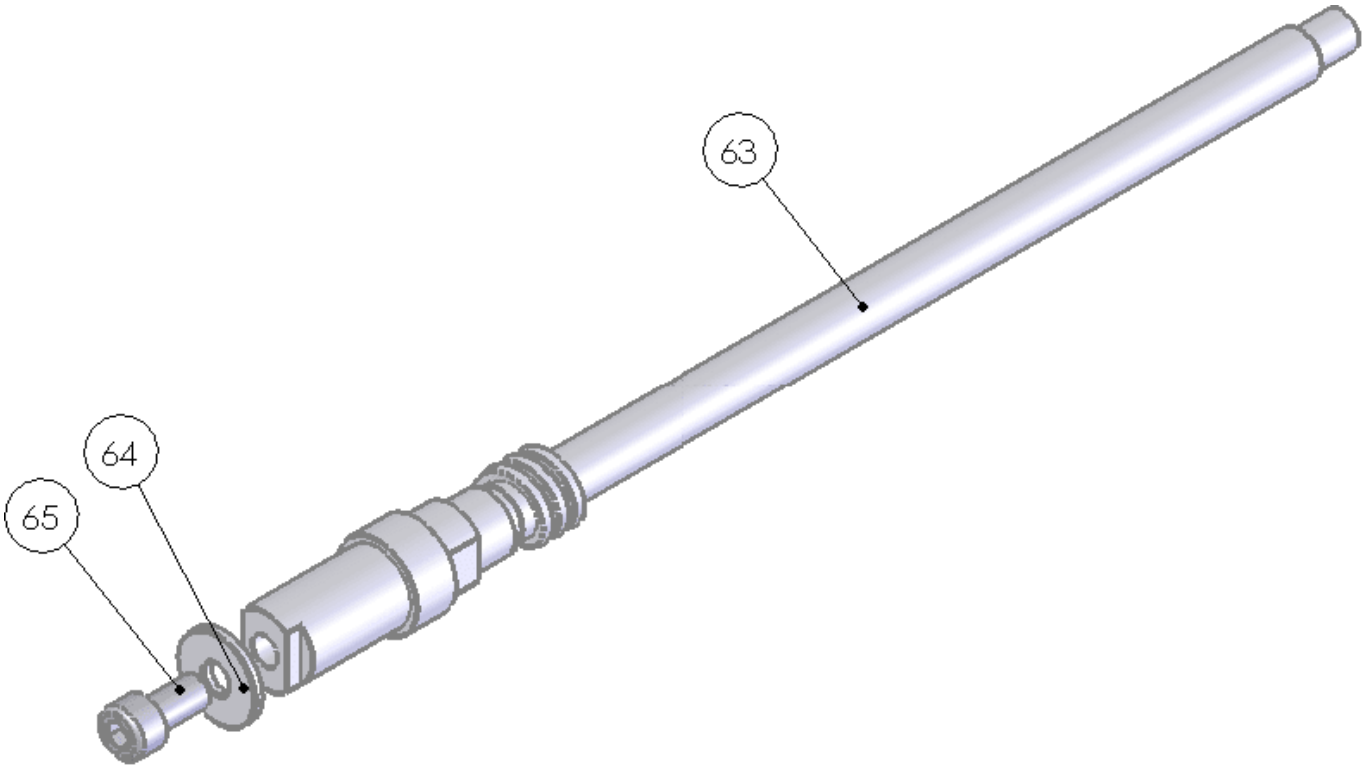

ITEM NO.	PART NUMBER	DESCRIPTION	QTY.
63	WS410-01	WINCH HANDLE	1
64	SC040-53	HANDLE GRIP	1
65	SC045-19	M10 NYLOCK NUT	1

Figure 13 – Shaft Assembly

ITEM NO.	PART NUMBER	DESCRIPTION	QTY.
66	C1	C1 CONNECTOR	1
67	AP01	ANGLE PLUG	1
68	SC099-06	AMEGRAPH CABLE 2.5 MM (1/10") DIA	40m (130ft)

Figure 14 – Cable Assembly

8 Technical Data

<table>
<tr><td>Load Capacity</td><td>▪ 45 kg (99 lbs) when used stand-alone on a SAN22SS winch frame or with the 3WBC bridge crane
▪ 70 kg (154 lbs) when used with the 4WBC bridge crane</td></tr>
<tr><td>Material</td><td>▪ Sounding drum: cast aluminium
▪ Slip ring: silver-plated
▪ Frame: robust stainless steel grade 304, powder-coated
▪ Amergraph cable: insulated inner core of 6 copper and 6 stainless steel wires, outer strands of 15 galvanised wires</td></tr>
<tr><td>Counter</td><td>Five digit resettable, registering depth in centimetres, 1 cm resolution (1/10 of a foot)</td></tr>
<tr><td>Mounting</td><td>▪ 4 × M10 mounting holes for winch board with outrigger model SAN22SS
▪ 4 × M10 mounting holes to suit ‘A Reel’ type trolley</td></tr>
<tr><td>Drum Capacity (cable length)</td><td>Choice of 3 winch models and 2 cable diameters:
<table>
<tr><th></th><th>WS250</th><th>WS400</th><th>WS500</th></tr>
<tr><td>2.5 mm diameter cable</td><td>25 m (84 ft)</td><td>40 m (131 ft)</td><td>50 m (164 ft)</td></tr>
<tr><td>3.2 mm diameter cable</td><td>20 m (65 ft)</td><td>30 m (99 ft)</td><td>40 m (131 ft)</td></tr>
</table></td></tr>
<tr><td>Dimension & Weight</td><td>
<table>
<tr><th></th><th>WS250</th><th>WS400</th><th>WS500</th></tr>
<tr><td>L × W × H (mm)</td><td>461 × 280 × 270</td><td>580 × 280 × 270</td><td>660 × 280 × 270</td></tr>
<tr><td>L × W × H (”)</td><td>18.1 × 11.0 × 10.6</td><td>23.0 × 11.0 × 10.6</td><td>26.0 × 11.0 × 10.6</td></tr>
<tr><td>Weight</td><td>25 kg (55 lb)</td><td>27 kg (60 lb)</td><td>33 kg (73 lb)</td></tr>
</table></td></tr>
</table>

9 Obligations of the Operator and Disposal

This chapter contains the following subsections:

- Obligations of the Operator 36
- Dismantling / Disposal 36

9.1 Obligations of the Operator

European Union

In the Single European Market it is the responsibility of the operator to ensure that the following legal regulations are observed and complied with: national implementation of the framework directive (89/391/EEC) and the associated individual directives, in particular 2009/104/EC, on minimum safety and health requirements for the use of work equipment by employees at work.

Worldwide

Regulations: If and where required, operating licences must be obtained by the operator. In addition, national or regional environmental protection requirements must be complied with, regardless of local legal provisions regarding the following topics:

- Occupational safety
- Product disposal

Connections: Local regulations for electrical installation and connections must be observed.

9.2 Dismantling / Disposal

When disposing of the units and their accessories, the applicable local regulations regarding environment, disposal and occupational safety must be observed.

Before dismantling

- Electrical Devices:
  - Switch off the units.
  - Disconnect electrical appliances from the power supply, regardless of whether the appliances are connected to the mains or to another power source.
- Mechanical devices:
  - Fix all loose components. Prevent the device from moving independently or unintentionally.
  - Loosen mechanical fastenings: Please note that appliances can be heavy and that loosening the fastenings may cause them to become mechanically unstable.

Disposal

Operators of old appliances must recycle them separately from unsorted municipal waste. This applies in particular to electrical waste and old electronic equipment.

Electrical waste and electronic equipment must not be disposed of as household waste!

Instead, these old appliances must be collected separately and disposed of via the local collection and return systems.

Integrated or provided batteries and accumulators must be separated from the appliances and disposed of at the designated

collection point. At the end of its service life, the lithium-ion battery must be disposed of according to legal provisions.

EU WEEE Directive

As players in the environmental market, KISTERS AG is committed to supporting efforts to avoid and recycle waste. Please consider:

- Avoidance before recycling!
- Recycling before disposal!

This symbol indicates that the scrapping of the unit must be carried out in accordance with Directive 2012/19/EU. Please observe the local implementation of the directive and any accompanying or supplementary laws and regulations.

10 Appendices

This chapter contains the following subsections:

- Break-Away Kit 38

10.1 Break-Away Kit

This chapter contains the following subsections:

- Introduction 38
- Installation 39
- Operation 43

10.1.1 Introduction

KISTERS provides a Break-Away Kit with its Cableway Systems and Winches as a safety precaution against large debris causing damage or injury during a flood situation. The Break-Away Swivels provide an inexpensive fracture point between a pulling line and a water flow sensor to avoid an expensive cableway structure from getting damaged or a human dragged into the water when gauging using a winch board or a bridge crane from the side of a bridge.

The Break-Away Swivel is used with the following KISTERS products:

1. The Hornet & the Hornet Plus (Series 2)
2. The Cable fox models:
   - CFX/S2/1014-H
   - CFX/S2/1014-H-EU
   - CFX/S2/1014-H-US
   - CFX/S2/1632-H
   - CFX/S2/1632-H-EU
   - CFX/S2/1632-H-US
3. Single Drum Winches Models:
   - WS250
   - WS400
   - WS500
   - WS700
   - WS1000 (Product coming soon)
4. Double Drum Winches Models:
   - DDT700
   - DDT1000

The table below shows the Break-Away load, Break-Away body and the pin required.

Model	Break-Away Load (kg)	Break-Away Part No.	Break-Away Pin Part No.	Colour Code	Number of Pins supplied
Hornet	182	MON99_SMATRSC127X04X	MON99_SMATRSC127X06X	Yellow	5
Hornet Plus	272	MON99_SMATRSC127X04X	MON99_SMATRSC127X05X	Orange	5
CFX/S2/1014-H	182	MON99_SMATRSC127X04X	MON99_SMATRSC127X06X	Yellow	5
CFX/S2/1014-H-EU	182	MON99_SMATRSC127X04X	MON99_SMATRSC127X06X	Yellow	5
CFX/S2/1014-H-US	182	MON99_SMATRSC127X04X	MON99_SMATRSC127X06X	Yellow	5
CFX/S2/1632-H	182	MON99_SMATRSC127X04X	MON99_SMATRSC127X06X	Yellow	5

Model	Break-Away Load (kg)	Break-Away Part No.	Break-Away Pin Part No.	Colour Code	Number of Pins supplied
CFX/S2/1632 -H-EU	182	MON99_SMATRSC127X04X	MON99_SMATRSC127X06X	Yellow	5
CFX/S2/1632 -H-US	182	MON99_SMATRSC127X04X	MON99_SMATRSC127X06X	Yellow	5
WS250	182	MON99_SMATRSC127X04X	MON99_SMATRSC127X06X	Yellow	5
WS400	182	MON99_SMATRSC127X04X	MON99_SMATRSC127X06X	Yellow	5
WS500	182	MON99_SMATRSC127X04X	MON99_SMATRSC127X06X	Yellow	5
WS700	272	MON99_SMATRSC127X04X	MON99_SMATRSC127X05X	Orange	5
WS1000 (Product coming soon)	272	MON99_SMATRSC127X04X	MON99_SMATRSC127X05X	Orange	5
DDT700	272	MON99_SMATRSC127X04X	MON99_SMATRSC127X05X	Orange	5
DDT1000	272	MON99_SMATRSC127X04X	MON99_SMATRSC127X05X	Orange	5

10.1.2 Installation

The Break-Away kit assembly is very straight forward, however attention needs to be made to the fine detail explained below for the Break-Away Kit to perform as required using the specific load designated for it.

Step 1

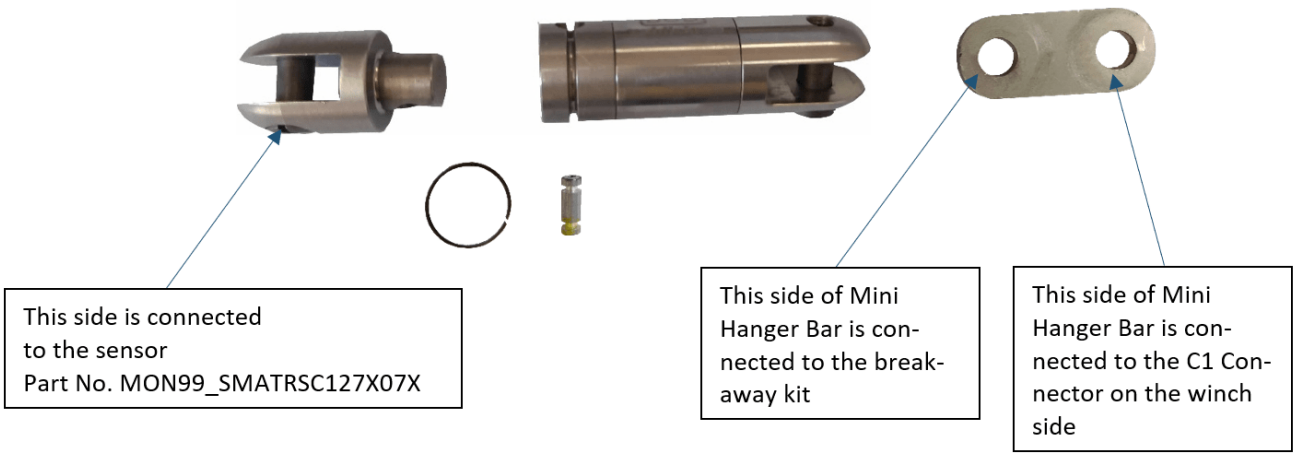

Note: In a situation where the Break-Away is released, and the sensor is detached and lost, only the small section of the Break-Away kit has to be reordered. Part No. MON99_SMATRSC127X07X.

Step 2

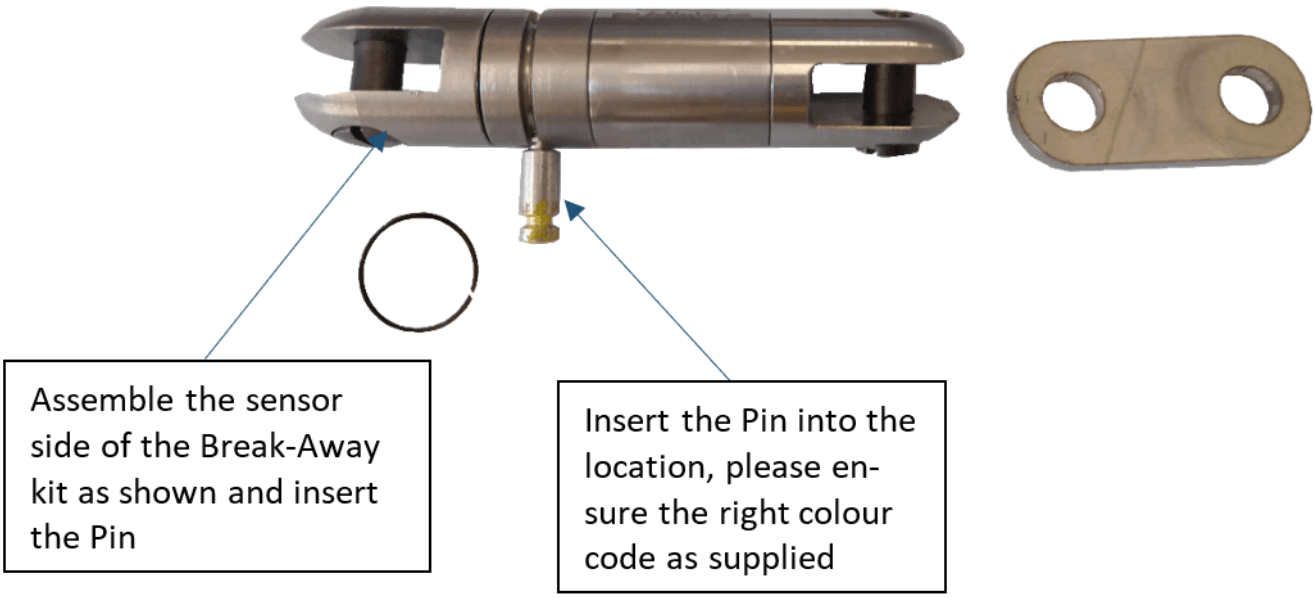
Assemble the sensor side of the Break-Away kit as shown and insert the Pin
Insert the Pin into the location, please ensure the right colour code as supplied

Step 3

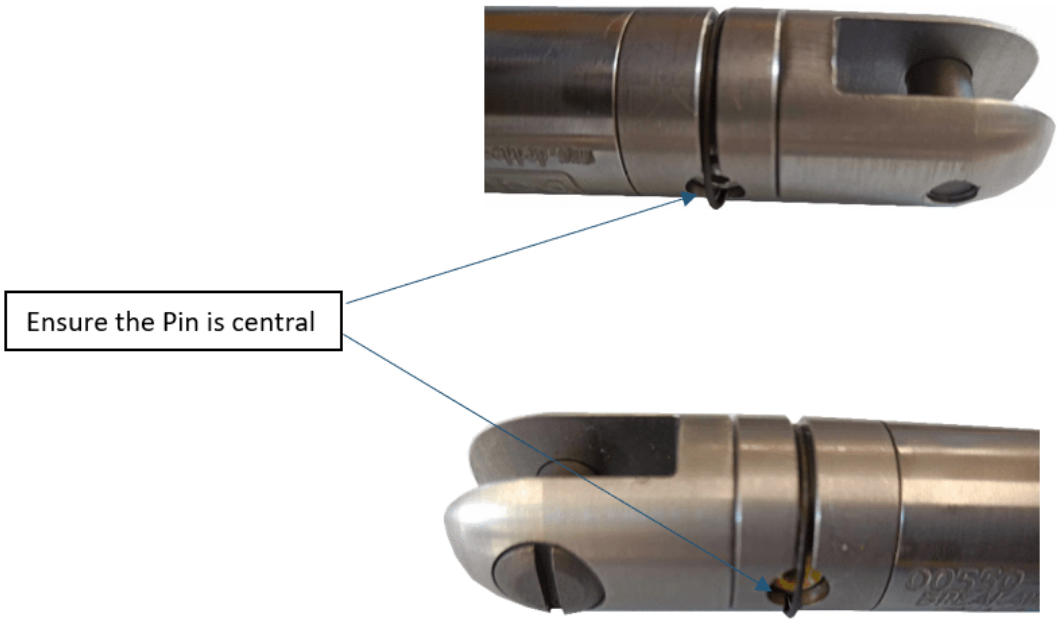

It is essential to have the pin located in the center position as shown above for the Break-Away to activate at the load specified. Failure to do so will result in the Break-Away activating at a higher load.

Step 4

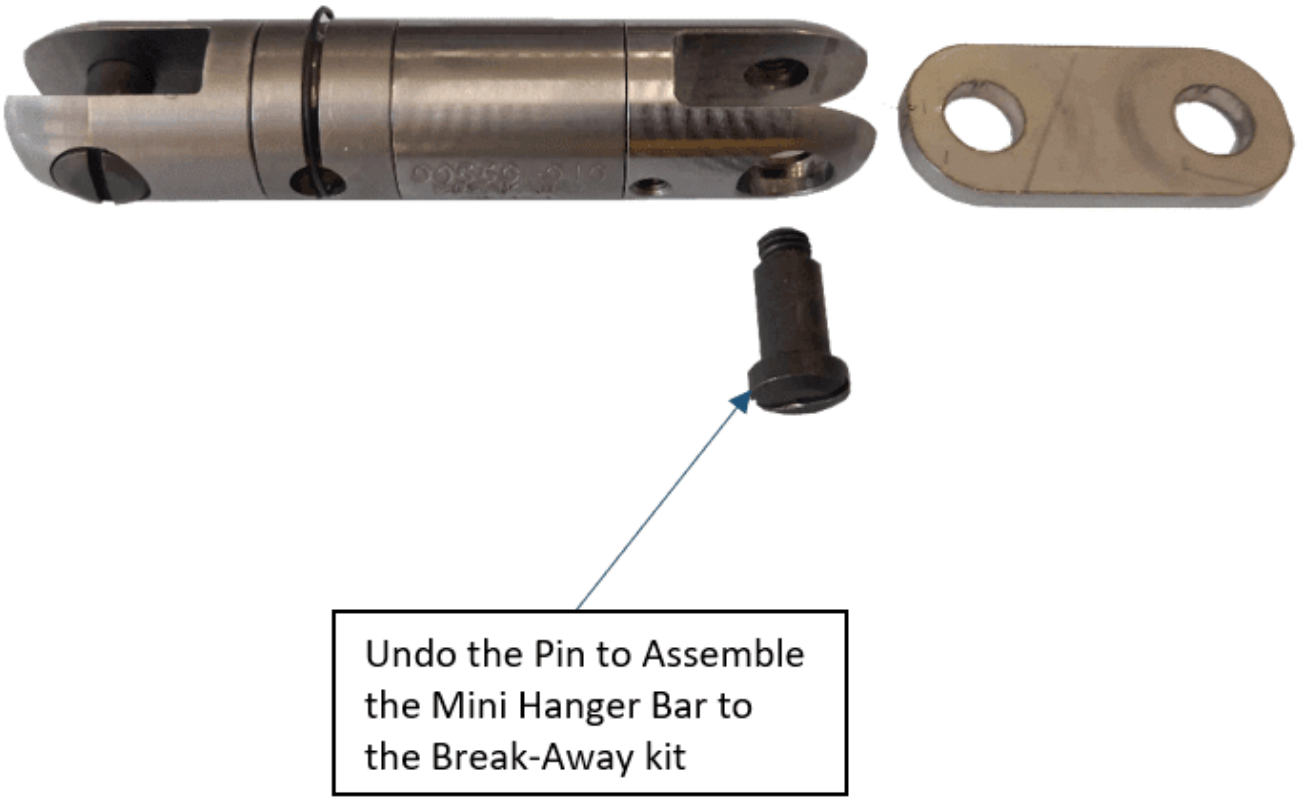

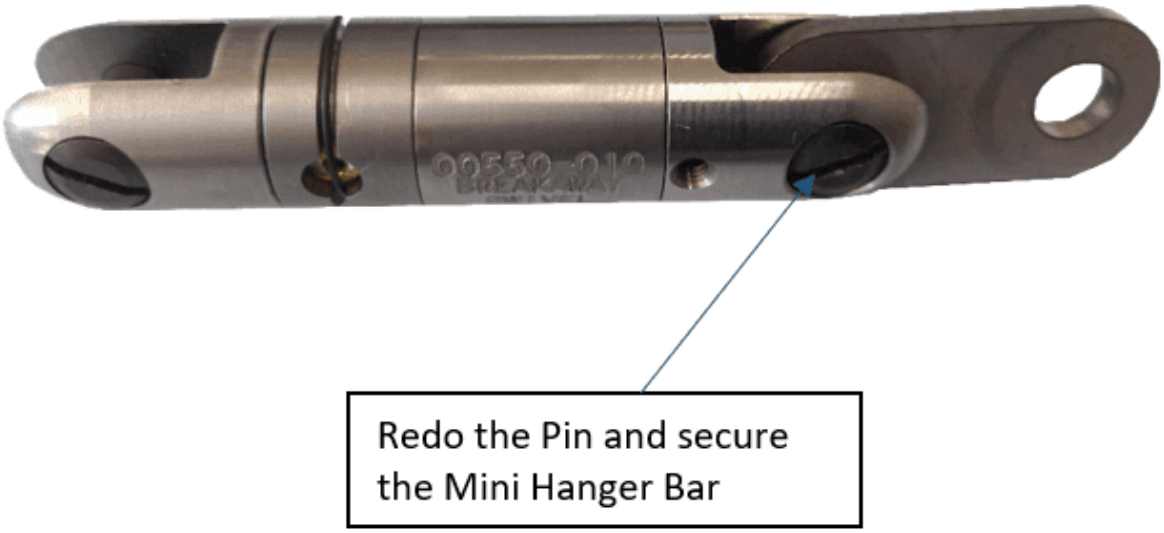

Note: The Break-Away Assembly is complete and ready to attach between the C1 connector (Winch) and the Sensor (The Stabilising Weight or Gauging Weight Hanger Bar on the sensor side).

10.1.3 Operation

It is essential to check the pin before using the Break-Away device, specially if the pin is used several times for gauging. Few safety precautions a user should take into consideration when using a Break-Away kit which are listed below:

- Visually inspect the pin for any marks or cracks if used more than once.
- In a situation when the gauging was in extremely rough water and the pin did not fail, it is advisable not to reuse the pin as the chance of failure will be higher due to fatigue. Please note the Break-Away device and sensor is more expensive than the pin itself.
- When using the Break-Away kit make sure you are wearing safety shoes and avoid having your feet directly under the gauging weight.
- When gauging, personnel should not move or stand directly below the gauging equipment.

After inspection, install the Break-Away kit as shown below:

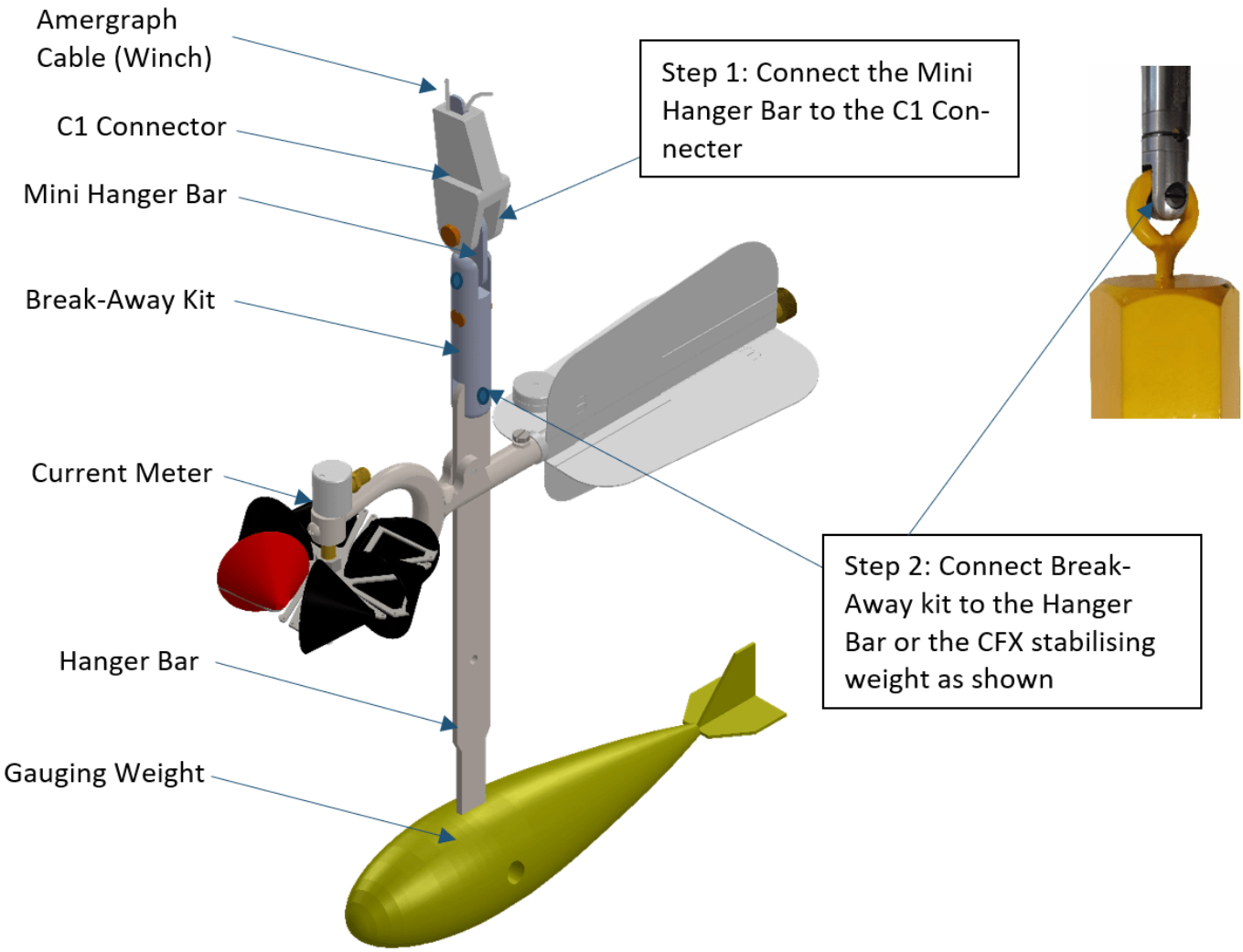

Contact Data

Europe	KISTERS Europe	+49 2408 9385 0 hydromet.sales@kisters.eu www.kisters.eu
Australia	KISTERS Australia	+612 9601 2022 sales@kisters.com.au www.kisters.com.au
New Zealand	KISTERS New Zealand	+64 7 857 0810 sales@kisters.co.nz www.kisters.co.nz
Latin America	KISTERS Latin America	+57 350 575 4079 sales@kisters-latam.com www.kisters-latam.com
North America	KISTERS North America	+1 561 459 4876 kna@kisters.net www.kisters.net
Spain	KISTERS Ibérica	info@kisters.es www.kisters.es

© 2025 | KISTERS

www.kisters.eu
© 2025 | KISTERS
19/03/2025

KISTERS
Empowering decisions of tomorrow